CITY OF HIGHLAND

IMPROVEMENT PLANS FOR BOULDER AVENUE AND BRIDGE REPLACEMENT OVER CITY CREEK FROM 500' SOUTH OF BASE LINE TO EUCALYPTUS AVE

FEDERAL PROJECT NO. BRLO 5449(014)
CITY PROJECT NO. BRG 04004
BID NO. 2011-09

GENERAL NOTES:

1. ALL WORK SHALL BE DONE IN ACCORDANCE WITH THESE PLANS AND THE STATE OF CALIFORNIA "STANDARD SPECIFICATIONS," LATEST EDITION, STANDARD SPECIFICATIONS FOR PUBLIC WORKS CONSTRUCTION (GREENBOOK), AND THE STANDARD DRAWINGS OF CALTRANS, THE COUNTY OF SAN BERNARDINO, THE CITY OF HIGHLAND, AND SBCFCD.
2. IT SHALL BE THE RESPONSIBILITY OF THE CONTRACTOR TO FAMILIARIZE HIMSELF WITH THE JOB SITE AND THE LOCATION OF ALL UNDERGROUND FACILITIES SHOWN OR NOT SHOWN ON THESE PLANS. NEITHER THE CITY OF HIGHLAND NOR THE ENGINEER WILL BE RESPONSIBLE FOR ANY DAMAGE TO THE UNDERGROUND FACILITIES.
3. IT SHALL BE THE CONTRACTOR'S RESPONSIBILITY TO OBTAIN ALL NECESSARY PERMITS.
4. IT SHALL BE THE CONTRACTOR'S RESPONSIBILITY TO CALL THE CITY ENGINEER'S OFFICE AT (909) 864-8732, EXT. 240 FOR INSPECTION 24 HOURS PRIOR TO PERFORMING ANY WORK. WORK PERFORMED WITHOUT CALLING FOR INSPECTION SHALL BE REJECTED AND SHALL BE REMOVED SOLELY AT THE CONTRACTOR'S EXPENSE.
5. UTILITY CONTRACTORS SHALL BE RESPONSIBLE FOR OBTAINING COMPACTION TESTS OF ALL TRENCH BACKFILL AND STREET SUBGRADES AND SUBMITTING THEM TO THE CITY ENGINEER FOR APPROVAL. NOTIFY CITY ENGINEER'S OFFICE AT (909) 864-8732, EXT. 240 24 HOURS PRIOR TO TESTS.
6. THE CONTRACTOR SHALL SATISFY HIMSELF THAT ESTIMATED QUANTITIES SHOWN (IF ANY) ARE CORRECT BEFORE BIDDING ON ANY ITEM.
7. THE CONTRACTOR SHALL MAINTAIN DUST CONTROL AT ALL TIMES. WORK SITE AND EXTERIOR STREETS SHALL BE IN A NEAT, CLEAN, HAZARD FREE, ORDERLY STATE THROUGHOUT CONSTRUCTION. SITE SHALL BE CLEANED UPON REQUEST OF THE INSPECTOR.
8. ALL EXISTING PAVEMENT TO BE REMOVED SHALL BE SAWCUT OR WHEELCUT AND REMOVED TO CLEAN STRAIGHT LINES.
9. AT ALL LOCATIONS WHERE NEW PAVEMENT JOINS EXISTING, THE EXISTING PAVEMENT SHALL BE COATED WITH AN ASPHALTIC EMULSION.
10. THE CONTRACTOR IS RESPONSIBLE FOR THE PROTECTION OF ALL UTILITY VALVES, BOXES AND COVERS, AND ADJUSTING OF ALL WATER VALVE BOXES AND COVERS TO FINISH GRADE.
11. THE CONTRACTOR SHALL RESET MANHOLE RINGS TO SURROUNDING A.C. PAVEMENT GRADE.
12. THE PRIVATE ENGINEER SIGNING THESE PLANS IS RESPONSIBLE FOR THE ACCURACY AND ACCEPTABILITY OF THE WORK HEREON. IN THE EVENT OF DISCREPANCIES ARISING DURING CONSTRUCTION, THE PRIVATE ENGINEER SHALL BE RESPONSIBLE FOR DETERMINING AN ACCEPTABLE SOLUTION AND REVISING THE PLANS FOR APPROVAL OF THE CITY ENGINEER.
13. THE CONTRACTOR SHALL CALL IN A LOCATION REQUEST TO UNDERGROUND SERVICE ALERT (USA), PHONE NUMBER 811, TWO WORKING DAYS BEFORE DIGGING. NO INSPECTION WILL BE PROVIDED BY THE CITY ENGINEER'S OFFICE AND NO CONSTRUCTION PERMIT ISSUED INVOLVING EXCAVATION FOR UNDERGROUND FACILITIES WILL BE VALID UNLESS THE APPLICANT HAS BEEN PROVIDED AN INQUIRY IDENTIFICATION NUMBER BY USA.
14. WHEN IMPROVEMENTS ARE TO BE PLACED ON NATIVE SOIL WHICH CONSISTS OF A ROCKY MATERIAL, THE SUB-GRADE SHALL BE PREPARED BY REMOVING ALL ROCKS WHICH PROTRUDE ABOVE THE SUB-GRADE AND ALL VOIDS OR DEPRESSIONS SHALL BE FILLED WITH A FINE GRADE MATERIAL OF A QUALITY BETTER THAN THE NATIVE MATERIAL.
15. ASPHALT CONCRETE SHALL BE SPREAD AND COMPACTED IN AT LEAST TWO LIFTS, WITH EACH LIFT NO THICKER THAN 2". UPON THE COMPLETION OF CONSTRUCTION, A FINAL INSPECTION OF THE PAVEMENT SURFACE SHALL BE PERFORMED AND ANY NOTED DEFICIENCIES SHALL BE REPAIRED IN ACCORANCE WITH THE CITY'S PAVEMENT REPAIR POLICY.
16. ALL PAVEMENT STRIPING AND MARKINGS SHALL BE THERMOPLASTIC.
17. IT SHALL BE THE RESPONSIBILITY OF THE CONTRACTOR TO COMPLY WITH THE PROVISIONS OF SECTION 8771 OF THE BUSINESS AND PROFESSIONS CODE AS AMENDED BY ASSEMBLY BILL 1414, WITH RESPECT TO ALL MONUMENTS.
18. TOPOGRAPHIC CONTOURS ON THESE PLANS ARE BASED ON MAPPING PREPARED ON JANUARY 16, 2006. THE TOPOGRAPHIC CONTOURS ON THESE PLANS MAY NOT ACCURATELY REPRESENT THE CURRENT GROUND SURFACE AND CONTOURS IN AND ADJACENT TO CITY CREEK AND BLEDSOE CREEK DUE TO FLOODING AND CHANNEL REPAIR WORK SINCE THESE TOPOGRAPHIC MAPS WERE PREPARED. CONTRACTOR SHALL VERIFY CURRENT CHANNEL AND BANK GROUND SURFACE ELEVATIONS PRIOR TO WORK IN CHANNELS AND SHALL NOTIFY ENGINEER OF ANY CONFLICTS WITH THE PROPOSED IMPROVEMENTS.

NOTE:
THE CONTRACTOR SHALL VERIFY ALL CONTROLLING FIELD DIMENSIONS BEFORE ORDERING OR FABRICATING ANY MATERIAL.

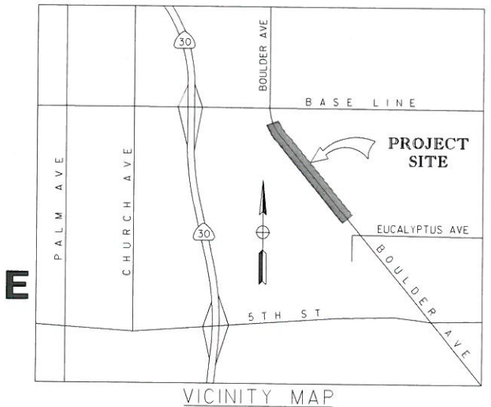

VICINITY MAP
NTS

PROJECT SHEET INDEX

ROADWAY PLANS	1 TO 37
STRUCTURE PLANS	1 TO 36
BLOW-OFF AND PUMPWELL STRUCTURE MODIFICATION PLANS (MWD)	1 TO 20
SCE PLANS	1 TO 3

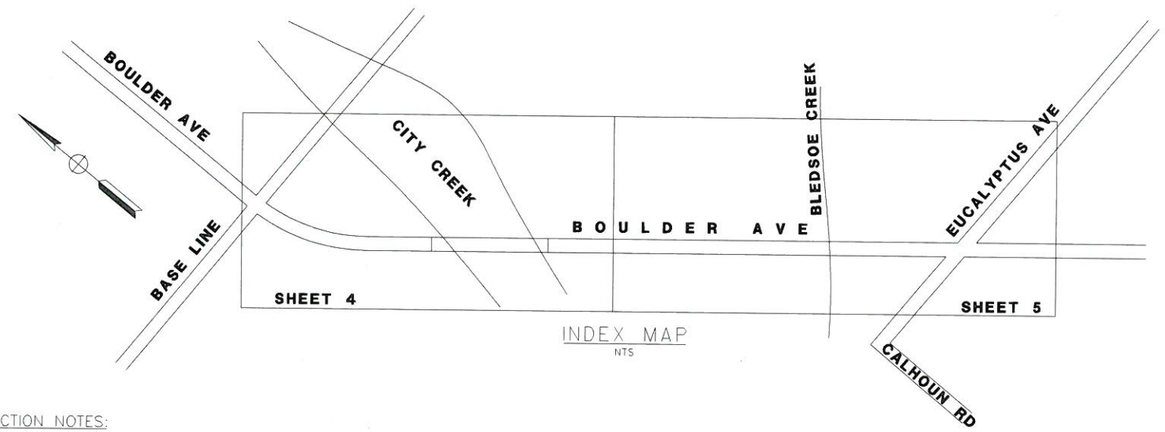

INDEX MAP
NTS

REGISTERED PROFESSIONAL ENGINEER
PAUL K. C. LAU
No. 38388
EXP. DATE 03/31/15
CIVIL
STATE OF CALIFORNIA

AS-BUILT
Paul Lau 06/10/14

RECORD DRAWINGS
These Record Drawings (As-Builts) are based upon review and reliance on the design revision during construction, field survey data, marked up prints from the Contractor and / or City Inspector, and a final site inspection.

CONSTRUCTION NOTES:

1. CONSTRUCT 8" CURB AND GUTTER PER SAN BERNARDINO COUNTY ROAD DEPARTMENT STANDARD PLAN NO. 115.
2. CONSTRUCT 0.18' ARHM OVER 0.42' HMA OVER 1.0' AGGREGATE BASE. △3
3. 0.17' COLD PLANE EXIST AC PAVEMENT & ARHM OVERLAY.
4. SAWCUT EXISTING AC PAVEMENT.
5. CONSTRUCT COMMERCIAL DRIVEWAY APPROACH WITH SIDEWALK (MODIFIED) PER CITY OF HIGHLAND STANDARD PLAN, W PER PLAN
6. CONSTRUCT SBCFCD ACCESS ROAD WITH 4" AGGREGATE BASE OVER COMPACTED NATIVE SOIL.
7. CONSTRUCT ROCK SLOPE PROTECTION ON CITY CREEK PER DETAIL 5 ON SHEET 10.
8. CONSTRUCT TYPE "C" SIDEWALK PER SAN BERNARDINO COUNTY ROAD DEPARTMENT STANDARD PLAN NO. 109.
9. CONSTRUCT SIDEWALK RAMP PER CITY OF HIGHLAND STANDARD PLAN.
10. CONSTRUCT TYPE A1-6 CURB PER CALTRANS 2006 STANDARD PLAN NO. A87A.
11. CONSTRUCT 24" RCP (D-LOAD PER PROFILE).
12. CONSTRUCT 0.20' ARHM OVER 0.30' HMA OVER 0.67' AGGREGATE BASE.
13. CONSTRUCT 36" CSP.
14. CONSTRUCT 10' x 6' DOUBLE RCB PER CALTRANS STANDARD PLAN D81.
15. CONSTRUCT SIDEWALK AROUND OBSTRUCTION PER DETAIL ON SHEET 6.
16. CONSTRUCT DOUBLE DRIVE GATE PER SBCFCD STANDARD PLAN SPECIAL DRAWING I. △1
17. PROTECT IN PLACE EXISTING FACILITY.
18. RELOCATE EXISTING IMPROVEMENT PER PLAN.
19. CONSTRUCT CONCRETE INLET WINGWALL TRANSITION STRUCTURE W/ 4' CUT-OFF WALL PER DETAIL ON SHEET 23.
20. CONSTRUCT WINGWALL STRUCTURE PER CALTRANS STANDARD PLAN D84 TYPE B AND f'c=4000 PSI.
21. REMOVE EXISTING.
22. CONSTRUCT CONCRETE COLLAR PER DETAIL SHOWN ON SHEET 20.
23. CONSTRUCT PIPE CULVERT HEADWALL AND WINGWALL STRUCTURE PER CALTRANS STANDARD PLAN D86B.
24. CONSTRUCT HEADWALL WING-TYPE PER SAN BERNARDINO COUNTY ROAD DEPARTMENT STANDARD PLAN NO. 209.
25. CONSTRUCT 42" CSP.
26. CONSTRUCT FULL DEPTH SLURRY CEMENT BACKFILL PER DETAIL ON SHEET 20.
27. CONSTRUCT 18" RCP (D-LOAD PER PROFILE).
28. CONSTRUCT TYPE "A" CATCH BASIN PER SAN BERNARDINO COUNTY TRANSPORTATION DEPARTMENT STANDARD PLAN NO. 206.
29. CONSTRUCT LOCAL DEPRESSION PER SAN BERNARDINO COUNTY ROAD DEPARTMENT STANDARD PLAN NO. 203 A, TYPE PER PLAN.
30. CONSTRUCT CONCRETE COLLAR PER SPPWC STANDARD PLAN 380-4.
31. CONSTRUCT CONCRETE BULKHEAD PER DETAIL SHOWN ON SHEET 25.
32. CONSTRUCT PICKET FENCE RAILING PER DETAIL 2 ON SHEET 10.
33. CONSTRUCT PICKET RAILING DOUBLE DRIVE GATE PER DETAILS ON SHEET 10S. △2
34. CONSTRUCT CONCRETE SLOPE PROTECTION AND CUT-OFF WALL PER DETAIL 4 ON SHEET 10.
35. CONSTRUCT 2" HMA OVER 6" AGGREGATE BASE ON MULTI-USE TRAIL.
36. CONSTRUCT 6" PCC OVER 4" AGGREGATE BASE ON MULTI-USE TRAIL.
37. RELOCATE EXISTING FACILITY BY OTHERS.
38. CONSTRUCT TYPE A1-8 CURB PER CALTRANS 2006 STANDARD PLAN NO. A87A.
39. CONSTRUCT METAL BEAM GUARD RAILING PER CALTRANS 2006 STANDARD PLAN NO. A77E1, TYPE 11B LAYOUT WITH TERMINAL SYSTEM (TYPE SRT) PER CALTRANS 2006 STANDARD PLAN NO. A77L1.
40. CONSTRUCT METAL BEAM GUARD RAILING TRANSITION RAILING (TYPE WB) PER CALTRANS 2006 STANDARD PLAN NO. A77J4.
41. CONSTRUCT METAL BEAM GUARD RAILING CONNECTION TO BRIDGE BARRIER (TYPE 80) PER CALTRANS 2006 STANDARD PLAN NO. A77J1 AND A77J2.
42. CONSTRUCT TRANSITION CURB (WITH CLASS B CONCRETE) BETWEEN BRIDGE BARRIER (TYPE 80) AND 8" CURB PER DETAIL 8 ON SHEET 11.
43. CONSTRUCT TRANSITION RAMP (WITH CLASS B CONCRETE) BETWEEN TYPE "C" SIDEWALK AND BRIDGE BARRIER PER DETAILS ON SHEET 12. △1
44. CONSTRUCT CHAIN LINK FENCE PER CALTRANS 2006 STANDARD PLAN NO. A85.
45. CONSTRUCT PIPE ANCHOR PER SPPWC STANDARD PLAN 221-2.
46. CONSTRUCT CURB AND SIDEWALK AROUND EXIST MANHOLE PER DETAIL ON SHEET 12.
47. CONSTRUCT ROCK SLOPE PROTECTION PER DETAIL ON SHEET 21.
48. CONSTRUCT 12" RCP (D-LOAD PER PROFILE).
49. INSTALL 2'X2' PRECAST CB W/CAST IRON FRAME AND GRATE PER DETAIL ON SHEET 25.
50. CONSTRUCT JUNCTION STRUCTURE PER SPPWC STANDARD PLAN 333-2.
51. CONSTRUCT BIOSWALE PER DETAIL.
52. CONSTRUCT CONCRETE FLARED END SECTION TYPE B PER CALTRANS STANDARD PLAN D94B.
53. CONSTRUCT 4" THICK SLURRY CEMENT BACKFILL.
54. CONSTRUCT MEDIAN CURB OPENING PER DETAIL ON SHEET 25, TYPE PER PLAN.
55. CONSTRUCT 8" STEEL PIPE.
56. CONSTRUCT CLEANOUT PER DETAIL ON SHEET 25.
57. CONSTRUCT 8" - 90° ELBOW
58. CONSTRUCT 15" RCP (D-LOAD PER PROFILE).
59. CONSTRUCT GRATING CATCH BASIN-ALLEY (LONGITUDINAL) PER SPPWC STD PLAN 304-3.
60. CONSTRUCT 6' MASONRY SPLIT-FACE BLOCK SOUND WALL ON SPREAD FOOTING (CASE 2) PER CALTRANS 2006 STANDARD PLAN NO. B15-1, DETAIL 13 ON SHEET 10 AND THE PROJECT SPECIFICATIONS.
61. CONSTRUCT LIQUID BOOT IMPERMEABLE LINER PER DETAIL ON SHEET 22, OR APPROVED EQUAL.
62. CONSTRUCT MEDIAN EDGE DRAIN PER DETAIL ON SHEET 25.
63. SLURRY SEAL
64. 0.17' COLD PLANE EXIST AC PAVEMENT & HMA OVERLAY.
65. CONSTRUCT MANHOLE STRUCTURE PER SPPWC STD PLAN 321-2.
66. CONSTRUCT EDGE DRAIN CLEANOUT AT 200' O.C. PER CALTRANS 2006 STANDARD PLAN NO. D99C.
67. CONSTRUCT PIPE GATE PER SBCFCD STANDARD PLAN NO. 209, W PER PLAN.
68. CONSTRUCT PICKET RAILING DOUBLE DRIVE GATE PER DETAIL 1 ON SHEET 10.
69. CONSTRUCT TRAIL ENTRY MONUMENT, SEE STRUCTURE PLANS.
70. CONSTRUCT CHAIN LINK FENCE PER SBCFCD STANDARD PLAN SPECIAL DRAWING I. △1
71. INSTALL TEMPORARY FENCING TYPE ESA
72. INSTALL TEMPORARY SILT FENCING PER CALTRANS STANDARD PLAN T51.
73. CONSTRUCT GRATED LINE DRAIN WITH BOTTOM OUTLET PLATE & HEEL RESISTANT GRATE PER CALTRANS 2006 STANDARD PLAN NO. D98C.
74. CONSTRUCT MODIFIED COMMERCIAL DRIVEWAY APPROACH PER DETAIL 15 ON SHEET 11A. △1
75. CONSTRUCT 0.58' HMA OVER 1.0' AGGREGATE BASE.
76. CONSTRUCT 0.50' HMA OVER 0.67' AGGREGATE BASE. △3
77. CONSTRUCT 4" SLEEVE FOR FUTURE IRRIGATION △1

ABBREVIATIONS:

AC	ASPHALT CONCRETE	N/O	NORTH OF
ARHM	ASPHALT RUBBER HOT MIX	NTS	NOT TO SCALE
AP	ANGLE POINT	O.C.	ON CENTER
AVE	AVENUE	OD	OUTSIDE DIAMETER
BB	BEGIN BRIDGE	OG	ORIGINAL GROUND
BC	BEGIN CURVE	PCC	PORTLAND CEMENT CONCRETE
BCR	BEGIN CURB RETURN	PG	PROPOSED GROUND
BEG	BEGIN	POCC	POINT OF COMPOUNDED CURVATURE
C & G	CURB & GUTTER	PROP	PROPOSED
℄	CENTERLINE	PVCC	POINT OF VERTICAL COMPOUNDED CURVATURE
CLRN	CLEARANCE	PVRC	POINT OF VERTICAL REVERSE CURVATURE
CSP	CORRUGATED STEEL PIPE	RCB	REINFORCED CONCRETE BOX
DIA	DIAMETER	RCP	REINFORCED CONCRETE PIPE
DWG	DRAWING	RD	ROAD
EB	END BRIDGE	RT	RIGHT
EC	END CURVE	R/W	RIGHT-OF-WAY
ECR	END CURB RETURN	SBCFCD	SAN BERNARDINO COUNTY FLOOD CONTROL DISTRICT
ELEV	ELEVATION	SD	STORM DRAIN
EXIST	EXISTING	S/O	SOUTH OF
FS	FINISHED SURFACE	STA	STATION
FT	FOOT (FEET)	SW	SIDEWALK
HMA	HOT MIX ASPHALT	TC	TOP OF CURB
ID	INSIDE DIAMETER	TW	TOP OF WALL, TSP - TOP OF SLOPE PROTECTION
LT	LEFT	TYP	TYPICAL
MIN	MINIMUM	VAR	VARIES

CONTACT INFORMATION

SOUTHERN CALIFORNIA EDISON (EMERGENCY)	(800) 611-1911
PACIFIC BELL (ALL REPAIRS)	611
VERIZON (REPAIRS)	(800) 483-1000
GAS COMPANY (EMERGENCY)	(800) 427-2200
EAST VALLEY WATER DISTRICT	(909) 888-8986
METROPOLITAN WATER DISTRICT	(213) 217-7107

BENCHMARK
S.P.S.N. 00586
6"x 6" CONC POST WITH DRIVE PIN LOCATED 1 MILE S.E. ALONG S.F.RR FROM RR CROSSING AT BOULDER AVE., AT SOUTH END OF ST. HWY R/W FENCE, 23.5 FT. NORTH OF NORTH RAIL OF RR, 41 FT. EAST OF BOULDER AVE., NORTHBOUND TRAFFIC LANE, 12 FT. NORTH OF CULVERT HEADWALL.
ELEV. = 1353.459'

REGISTERED PROFESSIONAL ENGINEER
EDWARD NG
No. 46767
Exp. 6/30/13
CIVIL
STATE OF CALIFORNIA

SUBMITTED BY:
DATE: 10/4/11

PLANS PREPARED BY:
AECOM
901 VIA PIEMONTE, 5TH FLOOR
ONTARIO, CA 91764

REVISIONS

MARK	DESCRIPTION	APPR.	DATE
4	AS BUILT PLANS	PL	6/10/14
3	PAVEMENT LIMITS		
2	CCO #2 - TRAIL ADA ENTRY		
1	CCO #1		

CITY OF HIGHLAND
DESIGNED BY JY/NL | DRAWN BY JY/NL | CHECKED BY PL
SUBMITTED BY PAUL LAU
RECOMMENDED BY
EDWARD NG 10/04/11
EDWARD NG DATE
R.C.E. 46767 EXP. 6-30-13
APPROVED BY
ERNEST WONG, CITY ENGINEER DATE 1-13-12
R.C.E. 37413 EXP. 6-30-12

BOULDER AVENUE BRIDGE OVER CITY CREEK (REPLACEMENT)

TITLE SHEET

DRAWER NO.

SHEET 1 R1 OF 37

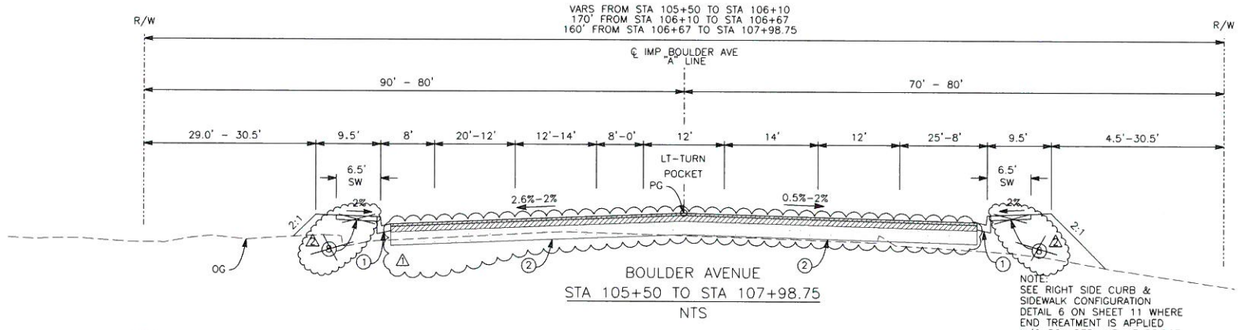

BOULDER AVENUE
STA 105+50 TO STA 107+98.75
NTS

NOTE:
SEE RIGHT SIDE CURB & SIDEWALK CONFIGURATION DETAIL 6 ON SHEET 11 WHERE END TREATMENT IS APPLIED N/O BOULDER AVENUE BRIDGE

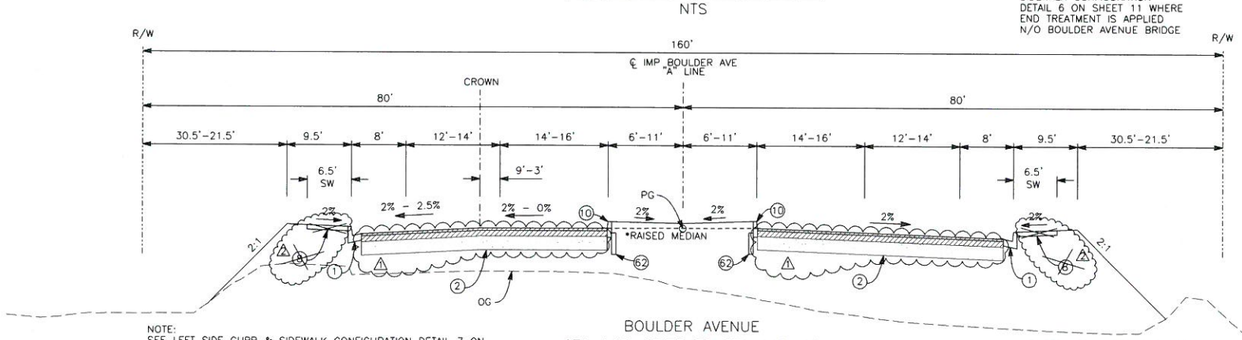

NOTE:
SEE LEFT SIDE CURB & SIDEWALK CONFIGURATION DETAIL 7 ON SHEET 11 WHERE END TREATMENT IS APPLIED S/O BOULDER AVENUE BRIDGE

BOULDER AVENUE
STA 112+43.75 TO STA 118+40
NTS

*RAISED MEDIAN BEGINS ON STA 112+54

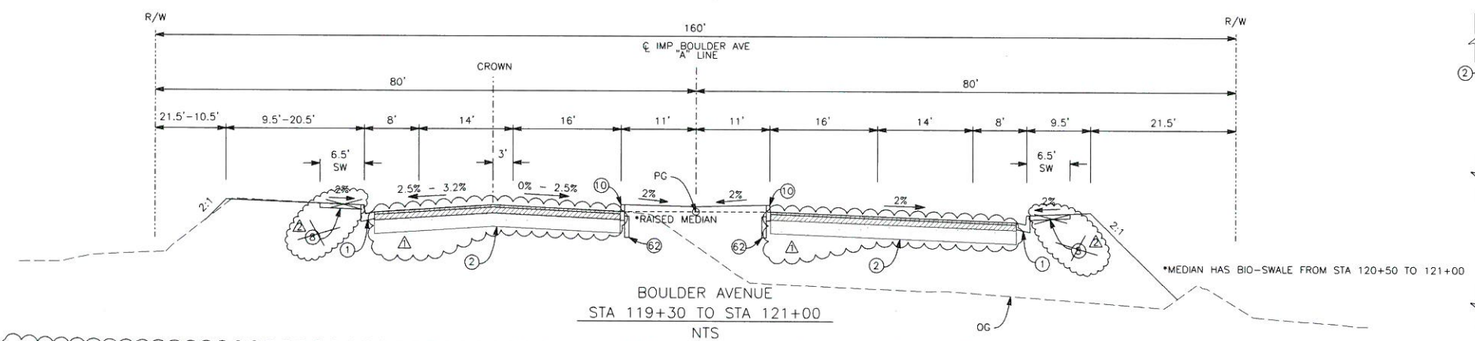

*MEDIAN HAS BIO-SWALE FROM STA 120+50 TO 121+00

BOULDER AVENUE
STA 119+30 TO STA 121+00
NTS

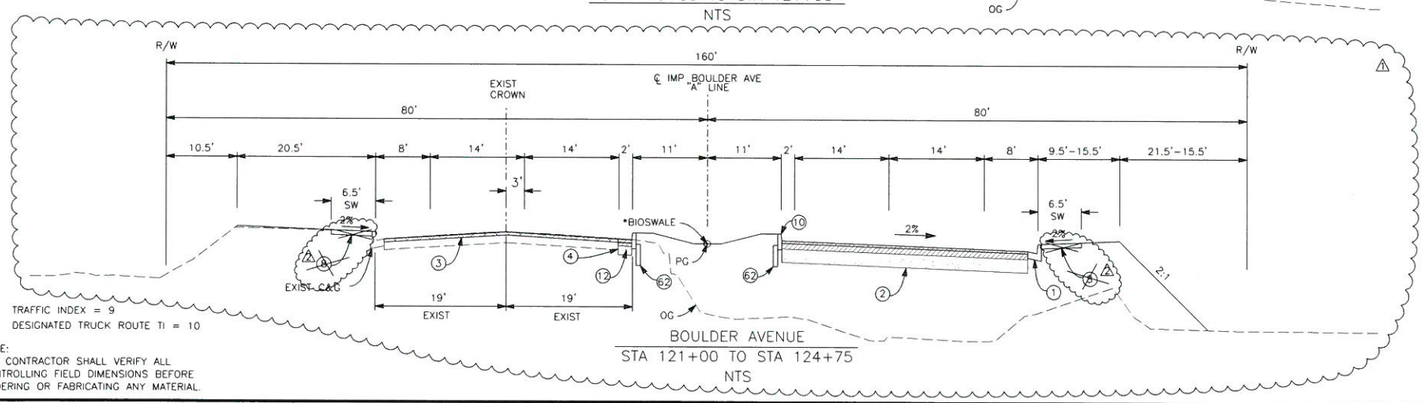

TRAFFIC INDEX = 9
DESIGNATED TRUCK ROUTE TI = 10

BOULDER AVENUE
STA 121+00 TO STA 124+75
NTS

NOTE:
THE CONTRACTOR SHALL VERIFY ALL CONTROLLING FIELD DIMENSIONS BEFORE ORDERING OR FABRICATING ANY MATERIAL.

SHEET INDEX (ROADWAY)

TITLE SHEET	1R1
TYPICAL SECTIONS BOULDER AVENUE	2R1, 3R1
ROADWAY PLAN BOULDER AVENUE - STA 100+00 TO STA 118+50	4R2
ROADWAY PLAN BOULDER AVENUE - STA 118+50 TO STA 133+50	5R4
ROADWAY PROFILE - BOULDER AVENUE STA 105+00 TO STA 118+00	6
ROADWAY PROFILE - BOULDER AVENUE STA 118+00 TO STA 131+50	7
PLAN AND PROFILE - SBCFCD ACCESS ROADS	8R1
MULTI-USE TRAIL PLAN AND PROFILE	9R1
CONSTRUCTION DETAILS NO. 1	10R2
TYPICAL SECTIONS AT CL OF PILASTERS ALONG THE SOUND WALL	10A
SOUNDWALL PILASTER DETAILS	10S1
BEAM SUPPORT (FOR SOUNDWALL)	10S2
CONSTRUCTION DETAILS TRAIL ENTRANCE GATE	10S3
CONSTRUCTION DETAILS NO. 2	11R1
CONSTRUCTION DETAILS NO. 2	11S
CONSTRUCTION DETAILS NO. 3	12R1
GRADING PLAN - BOULDER AVE STA 105+00 TO STA 118+50	13
GRADING PLAN - BOULDER AVE STA 118+50 TO STA 131+50	14R1
CHANNEL MAINTENANCE PLAN CITY CREEK	15
STORM DRAIN PLAN AND PROFILE: CULVERT #1 & #2	16
STORM DRAIN PLAN AND PROFILE: CULVERT #5, #5-A & #5-B	17R1
STORM DRAIN PLAN AND PROFILE: CULVERT #5, #5-C, #5-D & #7	18R1
STORM DRAIN PLAN AND PROFILE: CULVERT #3 & #4	19
STORM DRAIN PLAN AND PROFILE: BLEDSOE CRK CHANNEL & CULVERT #6	20R2
STORM DRAIN PLAN DRAINAGE DETAILS NO. 1	21R1
STORM DRAIN PLAN DRAINAGE DETAILS NO. 2	22R1
STORM DRAIN PLAN DRAINAGE DETAILS NO. 3	23R1
STORM DRAIN PLAN DRAINAGE DETAILS NO. 4	24
STORM DRAIN PLAN DRAINAGE DETAILS NO. 5	25R1
SIGNING AND STRIPING - BOULDER AVE STA 100+00 TO STA 109+50	26
SIGNING AND STRIPING - BOULDER AVE STA 109+50 TO STA 121+50	27
SIGNING AND STRIPING - BOULDER AVE STA 121+50 TO STA 133+50	28
EROSION CONTROL PLAN - BOULDER AVE STA 100+00 TO STA 118+50	29
EROSION CONTROL PLAN - BOULDER AVE STA 118+50 TO STA 133+50	30
EROSION CONTROL PLAN DETAILS	31
CITY CREEK HYDROSEED AREAS	32
CITY CREEK ALLUVIAL FAN TERRACE ENHANCEMENT AREAS	33
LIGHTING PLAN BOULDER AVENUE - STA 100+00 TO STA 118+50	34R1
LIGHTING PLAN BOULDER AVENUE - STA 118+50 TO STA 133+50	35R1
BRIDGE LIGHTING PLAN BOULDER AVE - STA 107+00 TO STA 112+80	36R1
BRIDGE WIRING DIAGRAM BOULDER AVE - STA 107+00 TO STA 112+80	37R1
TRAIL LIGHTING PLAN BOULDER AVE - STA 27+36 TO 28+86	37AS

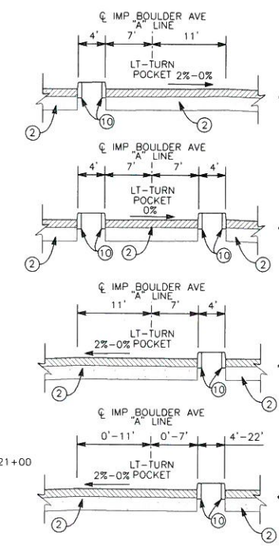

HMA OR ARHM PAVEMENT

AGGREGATE BASE

CONSTRUCTION NOTES

1. CONSTRUCT 8" CURB AND GUTTER PER SAN BERNARDINO COUNTY ROAD DEPARTMENT STANDARD PLAN NO. 115
2. CONSTRUCT 0.18' ARHM OVER 0.42' HMA OVER 1.0' AGGREGATE BASE
3. 0.17' COLD PLANE EXIST AC PAVEMENT & ARHM OVERLAY
4. SAWCUT EXISTING AC PAVEMENT
6. ~~CONSTRUCT TYPE "C" SIDEWALK PER SAN BERNARDINO COUNTY ROAD DEPARTMENT STANDARD PLAN NO. 199~~
10. CONSTRUCT TYPE A1-6 CURB PER CALTRANS 2006 STANDARD PLAN NO. A87A
12. CONSTRUCT 0.20' ARHM OVER 0.30' HMA OVER 0.67' AGGREGATE BASE
62. CONSTRUCT MEDIAN EDGE DRAIN PER DETAIL ON SHEET 25.

NOTES:
1. SEE STRUCTURE PLANS FOR BOULDER AVE TYPICAL SECTION FROM STA 107+98.75 TO STA 112+43.75

REGISTERED PROFESSIONAL ENGINEER PAUL K. C. LAU No. 38388 EXP. DATE 03/31/13 CIVIL STATE OF CALIFORNIA

AS-BUILT
Paul Lau 06/10/14

BENCHMARK
S.P.S.N. 00586
6'x 6' CONC POST WITH DRIVE PIN LOCATED 1 MILE S.E. ALONG S.F.RR FROM RR CROSSING AT BOULDER AVE., AT SOUTH END OF ST. HWY R/W FENCE, 23.5 FT. NORTH OF NORTH RAIL OF RR, 41 FT. EAST OF BOULDER AVE., NORTHBOUND TRAFFIC LANE, 12 FT. NORTH OF CULVERT HEADWALL. ELEV. = 1353.459'

REGISTERED PROFESSIONAL ENGINEER EDWARD NG No. 46767 Exp. 6/30/13 CIVIL STATE OF CALIFORNIA

SUBMITTED BY: DATE: 10/4/11

PLANS PREPARED BY:
AECOM
901 VIA PIEMONTE, 5TH FLOOR
ONTARIO, CA 91764

REVISIONS			
2	AS BUILT PLANS	PL	6/10/14
1	PAVEMENT LIMITS		
MARK	DESCRIPTION	APPR.	DATE

CITY OF HIGHLAND

DESIGNED BY JY/NL | DRAWN BY JY/NL | CHECKED BY PL
SUBMITTED BY: PAUL LAU
RECOMMENDED BY: EDWARD NG 10/04/11
EDWARD NG R.C.E. 46767 EXP. 6-30-13 DATE
APPROVED BY: Ernest Wong 10-6-11
ERNEST WONG, CITY ENGINEER R.C.E. 37413 EXP. 6-30-12 DATE

BOULDER AVENUE BRIDGE OVER CITY CREEK (REPLACEMENT)

TYPICAL SECTIONS BOULDER AVE

DRAWER NO.
SHEET 2R1 OF 37

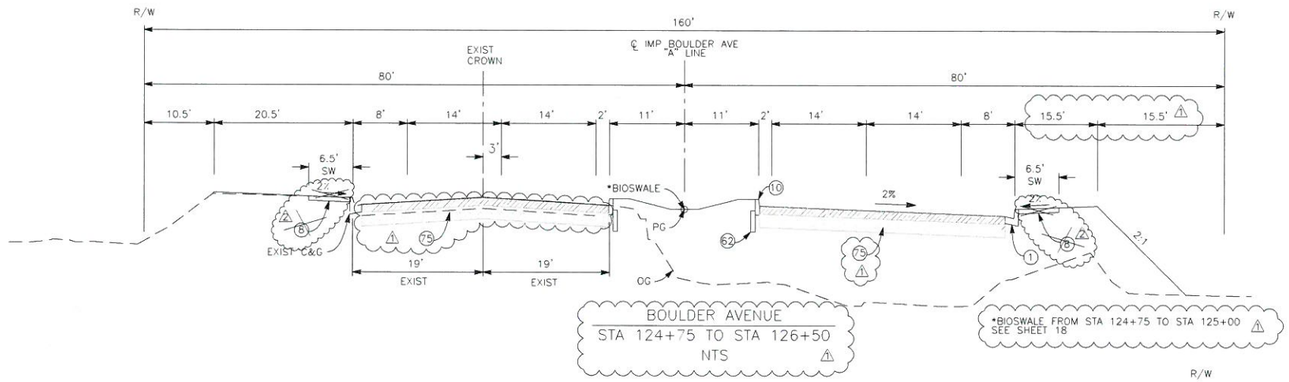

BOULDER AVENUE
STA 124+75 TO STA 126+50
NTS

*BIOSWALE FROM STA 124+75 TO STA 125+00
SEE SHEET 18

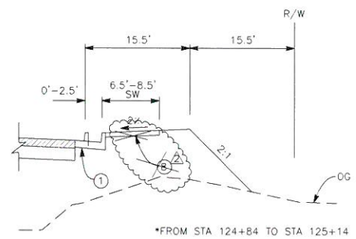

*FROM STA 124+84 TO STA 125+14

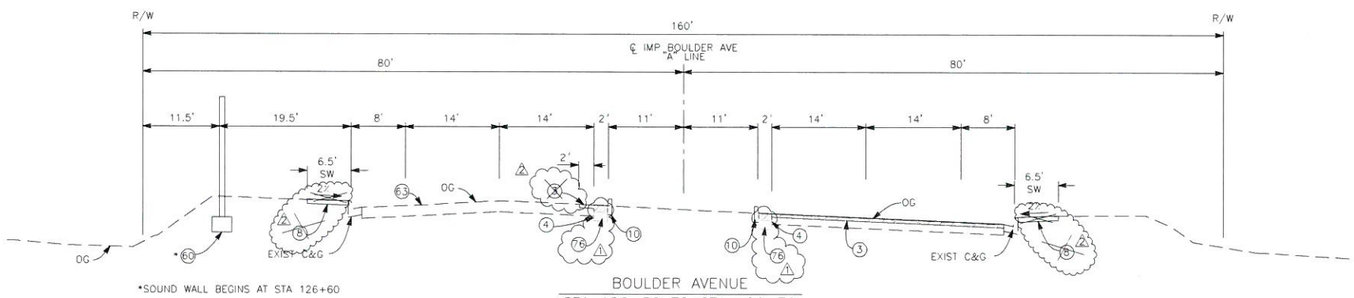

*SOUND WALL BEGINS AT STA 126+60

BOULDER AVENUE
STA 126+50 TO STA 126+70
NTS

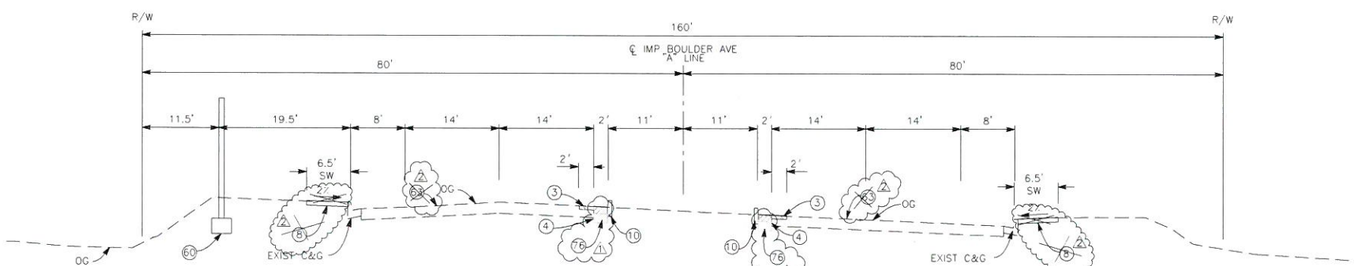

BOULDER AVENUE
STA 126+70 TO STA 131+28
NTS

TRAFFIC INDEX = 9
DESIGNATED TRUCK ROUTE TI = 10

NOTE:
THE CONTRACTOR SHALL VERIFY ALL CONTROLLING FIELD DIMENSIONS BEFORE ORDERING OR FABRICATING ANY MATERIAL.

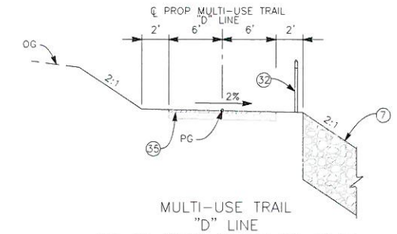

MULTI-USE TRAIL
"D" LINE
STA 20+00.00 TO STA 21+80.16
& STA 26+08.19 TO STA 26+85.93
NTS

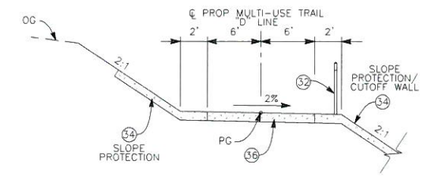

MULTI-USE TRAIL
"D" LINE
STA 21+80.16 TO STA 26+08.69
NTS

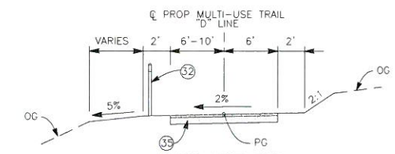

MULTI-USE TRAIL
"D" LINE
STA 26+85.93 TO STA 29+32.96
NTS

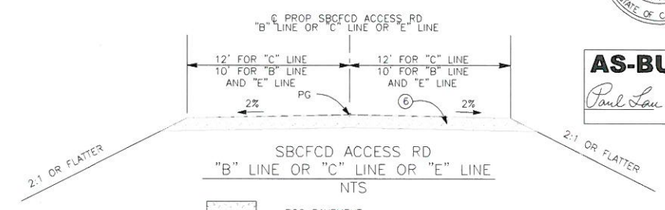

SBCFCD ACCESS RD
"B" LINE OR "C" LINE OR "E" LINE
NTS

PCC PAVEMENT
HMA OR ARHM PAVEMENT
AGGREGATE BASE
COLD PLANE & ARHM PAVEMENT

CONSTRUCTION NOTES

1. CONSTRUCT 8" CURB AND GUTTER PER SAN BERNARDINO COUNTY ROAD DEPARTMENT STANDARD PLAN NO. 115
2. ~~CONSTRUCT 0.50' HMA OVER 1.0' AGGREGATE BASE~~ △1
3. △2 ~~0.17' COLD PLANE EXIST AC PAVEMENT & ARHM OVERLAY~~
4. SAWCUT EXISTING AC PAVEMENT
6. CONSTRUCT SBCFCD ACCESS ROAD WITH 4" AGGREGATE BASE OVER COMPACTED NATIVE SOIL
7. CONSTRUCT ROCK SLOPE PROTECTION ON CITY CREEK PER DETAIL 3 ON SHEET 18
8. △2 ~~CONSTRUCT TYPE "C" SIDEWALK PER SAN BERNARDINO COUNTY ROAD DEPARTMENT STANDARD PLAN NO. 109~~
10. CONSTRUCT TYPE A1-6 CURB PER CALTRANS 2006 STANDARD PLAN NO. A87A.
12. △2 ~~CONSTRUCT 0.50' ARHM OVER 0.67' AGGREGATE BASE~~ △1
32. CONSTRUCT PICKET FENCE RAILING PER DETAIL 2 ON SHEET 10.
34. CONSTRUCT CONCRETE SLOPE PROTECTION AND CUT-OFF WALL PER DETAIL 4 ON SHEET 10.
35. CONSTRUCT 2" HMA OVER 6" AGGREGATE BASE ON MULTI-USE TRAIL.
36. CONSTRUCT 6" PCC OVER 4" AGGREGATE BASE ON MULTI-USE TRAIL.
60. CONSTRUCT 6' MASONRY SPLIT-FACE BLOCK SOUND WALL ON SPREAD FOOTING (CASE 2) PER CALTRANS 2006 STANDARD PLAN NO. B15-1, DETAIL 13 ON SHEET 10 AND THE PROJECT SPECIFICATIONS.
62. CONSTRUCT MEDIAN EDGE DRAIN PER DETAIL ON SHEET 25.
63. △2 ~~SLURRY SEAL~~
75. △2 CONSTRUCT ~~0.50' HMA~~ OVER 1.0' AGGREGATE BASE. 0.18' ARHM OVER 0.4' HMA △1
76. CONSTRUCT ~~0.50' HMA~~ OVER 0.67' AGGREGATE BASE. 0.18' ARHM OVER 0.42' HMA △1

REGISTERED PROFESSIONAL ENGINEER PAUL K. C. LAU No. 38388 EXP. DATE 03/31/15 CIVIL STATE OF CALIFORNIA

AS-BUILT
Paul Lau 06/10/14

BENCHMARK
S.P.S.N. 00586
6"x 6" CONC POST WITH DRIVE PIN LOCATED 1 MILE S.E. ALONG S.F.RR FROM RR CROSSING AT BOULDER AVE., AT SOUTH END OF ST. HWY R/W FENCE, 23.5 FT. NORTH OF NORTH RAIL OF RR, 41 FT. EAST OF BOULDER AVE., NORTHBOUND TRAFFIC LANE, 12 FT. NORTH OF CULVERT HEADWALL.
ELEV. = 1353.459'

REGISTERED PROFESSIONAL ENGINEER EDWARD NG No. 46767 Exp. 6/30/13 CIVIL STATE OF CALIFORNIA

SUBMITTED BY: Ed Ng DATE: 10/4/11

PLANS PREPARED BY:
AECOM
901 VIA PIEMONTE, 5TH FLOOR
ONTARIO, CA 91764

REVISIONS

MARK	DESCRIPTION	APPR.	DATE
△2	AS BUILT PLANS	PL	6/10/14
△1	PAVEMENT LIMITS		

CITY OF HIGHLAND

DESIGNED BY	DRAWN BY	CHECKED BY
JY/NL	JY/NL	PL

SUBMITTED BY: PAUL LAU
RECOMMENDED BY: EDWARD NG 10/04/11
EDWARD NG DATE
R.C.E. 46767 EXP. 6-30-13

APPROVED BY: Ernest Wong 10-6-11
ERNEST WONG, CITY ENGINEER DATE
R.C.E. 37413 EXP. 6-30-12

BOULDER AVENUE BRIDGE OVER CITY CREEK (REPLACEMENT)

TYPICAL SECTIONS BOULDER AVE

DRAWER NO.

SHEET 3R1 OF 37

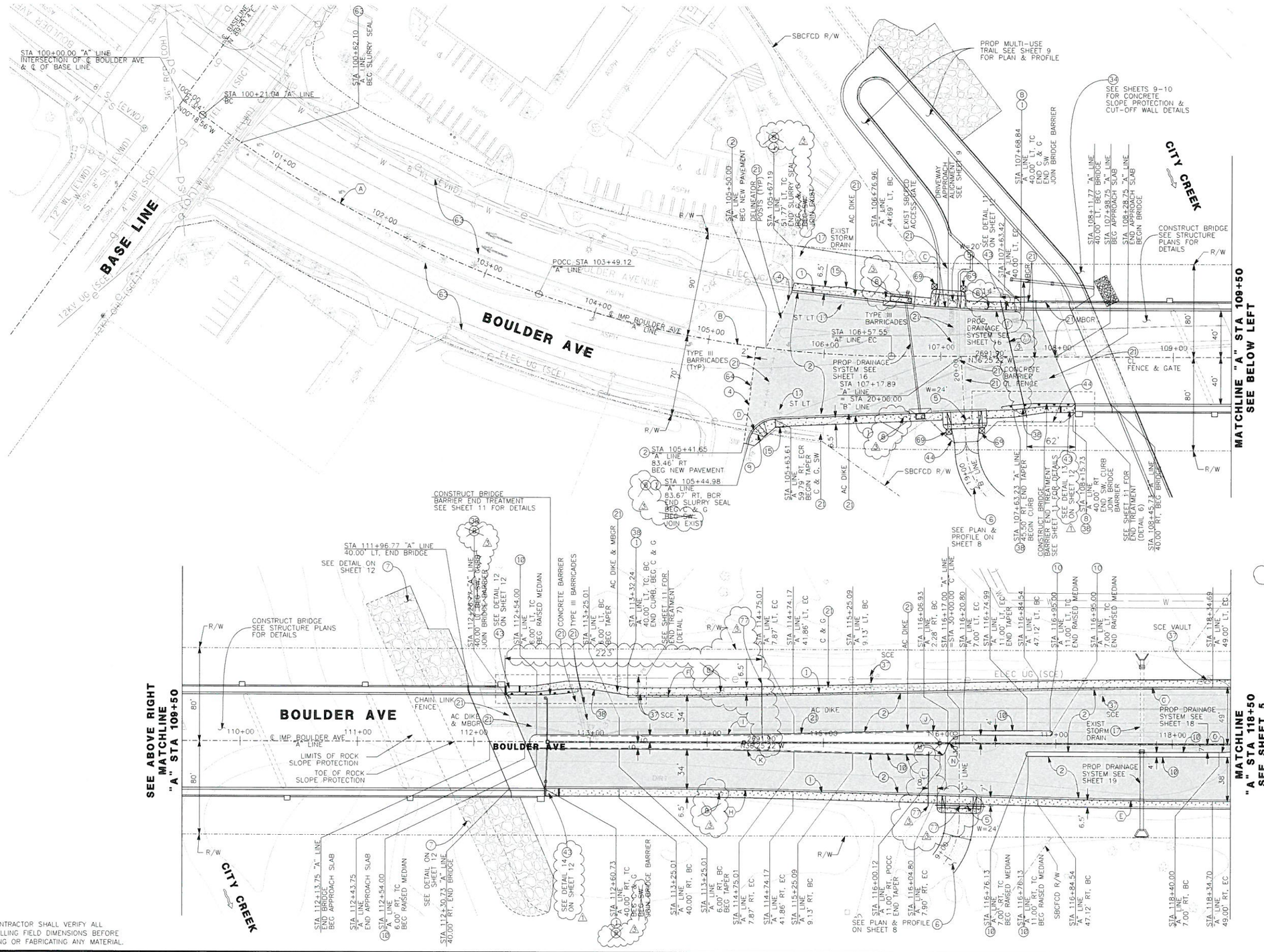

CURVE DATA

NO	RADIUS	DELTA ANGLE	TANGENT	LENGTH
(A)	1141.21'	16°28'18.50"	165.18'	328.08'
(B)	900.00'	19°38'06.70"	155.74'	308.43'
(C)	800.00'	6°12'17.40"	43.36'	86.64'
(D)	25.00'	79°26'41.87"	20.77'	34.66'
(E)	6008.00'	1°25'55.88"	75.09'	150.18'
(F)	5968.00'	1°21'45.60"	70.97'	141.94'
(G)	6008.00'	1°25'55.55"	75.09'	150.17'
(H)	5968.00'	1°25'55.55"	74.59'	149.17'
(I)	6002.00'	1°25'55.55"	75.01'	150.02'
(J)	5998.00'	1°25'55.55"	74.96'	149.92'
(K)	6002.00'	1°25'55.55"	75.01'	150.02'
(L)	5998.00'	0°43'00.78"	37.52'	75.05'
(M)	5.00'	68°18'50.47"	3.34'	5.96'
(N)	15.00'	67°35'55.72"	10.04'	17.70'
(O)	104.45'	16°41'57.28"	15.33'	30.44'

ARHM PAVEMENT

PCC (SIDEWALK & DRIVEWAY)

SLURRY SEAL

CONSTRUCTION NOTES:

1. CONSTRUCT 8" CURB AND GUTTER PER SAN BERNARDINO COUNTY ROAD DEPARTMENT STANDARD PLAN NO. 115.
2. CONSTRUCT 0.18' ARHM OVER 0.42' HMA OVER 1.0' AGGREGATE BASE.
4. SAWCUT EXISTING AC PAVEMENT.
5. CONSTRUCT COMMERCIAL DRIVEWAY APPROACH WITH SIDEWALK (MODIFIED) PER CITY OF HIGHLAND STANDARD PLAN, W PER PLAN
6. CONSTRUCT SBCFCD ACCESS ROAD WITH 4" AGGREGATE BASE OVER COMPACTED NATIVE SOIL.
7. CONSTRUCT ROCK SLOPE PROTECTION ON CITY CREEK PER DETAIL 5 ON SHEET 10.
8. CONSTRUCT TYPE "C" SIDEWALK PER SAN BERNARDINO COUNTY ROAD DEPARTMENT STANDARD PLAN NO. 109.
9. CONSTRUCT SIDEWALK RAMP PER CITY OF HIGHLAND STANDARD PLAN.
10. CONSTRUCT TYPE A1-6 CURB PER CALTRANS 2006 STANDARD PLAN NO. A87A.
15. CONSTRUCT SIDEWALK AROUND OBSTRUCTION PER DETAIL ON SHEET 5.
17. PROTECT IN PLACE EXISTING FACILITY.
21. REMOVE EXISTING.
34. CONSTRUCT CONCRETE SLOPE PROTECTION AND CUT-OFF WALL PER DETAIL 4 ON SHEET 10.
37. RELOCATE EXISTING FACILITY BY OTHERS.
38. CONSTRUCT TYPE A1-8 CURB PER CALTRANS 2006 STANDARD PLAN NO. A87A.
43. CONSTRUCT TRANSITION RAMP (WITH CLASS B CONCRETE) BETWEEN TYPE "C" SIDEWALK AND BRIDGE BARRIER PER DETAILS ON SHEET 12.
44. CONSTRUCT CHAIN LINK FENCE PER CALTRANS 2006 STANDARD PLAN NO. A85.
63. SLURRY SEAL.
64. 0.17' COLD PLANE EXIST AC PAVEMENT & HMA OVERLAY.
69. CONSTRUCT TRAIL ENTRY MONUMENT, SEE STRUCTURE PLANS.
77. CONSTRUCT 4" SLEEVE FOR FUTURE IRRIGATION.

REGISTERED PROFESSIONAL ENGINEER PAUL K. C. LAU No. 38388 EXP. DATE 03/31/15 CIVIL STATE OF CALIFORNIA

AS-BUILT
Paul Lau 06/10/14

NOTE:
THE CONTRACTOR SHALL VERIFY ALL CONTROLLING FIELD DIMENSIONS BEFORE ORDERING OR FABRICATING ANY MATERIAL.

BENCHMARK
S.P.S.N. 00586
6"x 6" CONC POST WITH DRIVE PIN LOCATED 1 MILE S.E. ALONG S.F.RR FROM RR CROSSING AT BOULDER AVE., AT SOUTH END OF ST. HWY R/W FENCE, 23.5 FT. NORTH OF NORTH RAIL OF RR, 41 FT. EAST OF BOULDER AVE., NORTHBOUND TRAFFIC LANE, 12 FT. NORTH OF CULVERT HEADWALL. ELEV. = 1353.459'

REGISTERED PROFESSIONAL ENGINEER EDWARD NG No. 46767 Exp. 6/30/13 CIVIL STATE OF CALIFORNIA

SUBMITTED BY: DATE: 10/4/11

PLANS PREPARED BY:
AECOM
901 VIA PIEMONTE, 5TH FLOOR
ONTARIO, CA 91764

REVISIONS			
3	AS BUILT PLANS	PL	6/10/14
2	PAVEMENT LIMITS		
1	CCO #1		
MARK	DESCRIPTION	APPR.	DATE

CITY OF HIGHLAND

DESIGNED BY JY/NL | DRAWN BY JY/NL | CHECKED BY PL | APPROVED BY Ernest Wong 11-13-12

SUBMITTED BY PAUL LAU

RECOMMENDED BY EDWARD NG 10/04/11
EDWARD NG R.C.E. 46767 EXP. 6-30-13 DATE

ERNEST WONG, CITY ENGINEER R.C.E. 37413 EXP. 6-30-12 DATE

BOULDER AVENUE BRIDGE OVER CITY CREEK (REPLACEMENT)

ROADWAY PLAN BOULDER AVE STA 100+00 TO 118+50

DRAWER NO.

SHEET 4R2 OF 37

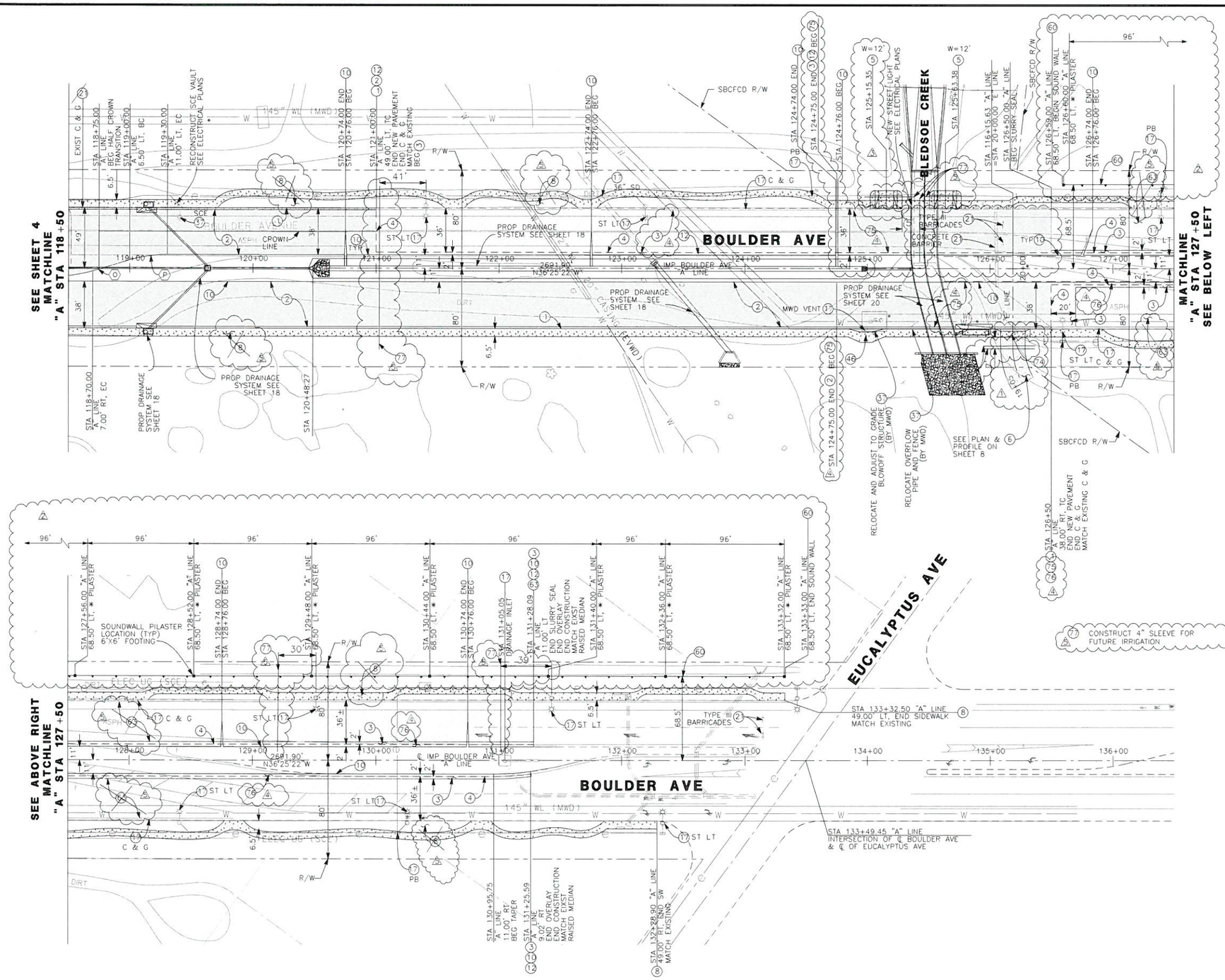

CURVE DATA

NO	RADIUS	DELTA ANGLE	TANGENT	LENGTH
(O)	104.45'	16°41'57.28"	15.33'	30.44'
(P)	104.45'	16°41'57.28"	15.33'	30.44'

HMA/ARHM PAVEMENT

AHRM OVERLAY

PCC (SIDEWALK & DRIVEWAY)

SLURRY SEAL

CONSTRUCTION NOTES:

1. CONSTRUCT 6" CURB AND GUTTER PER SAN BERNARDINO COUNTY ROAD DEPARTMENT STANDARD PLAN NO. 115.
2. CONSTRUCT 0.18' ARHM OVER 0.42' HMA OVER 1.0' AGGREGATE BASE. 4
3. 0.17' COLD PLANE EXIST AC PAVEMENT & ARHM OVERLAY.
4. SAWCUT EXISTING AC PAVEMENT.
5. CONSTRUCT COMMERCIAL DRIVEWAY APPROACH WITH SIDEWALK (MODIFIED) PER CITY OF HIGHLAND STANDARD PLAN, W PER PLAN
6. CONSTRUCT SBCFCD ACCESS ROAD WITH 4" AGGREGATE BASE OVER COMPACTED NATIVE SOIL.
8. ~~CONSTRUCT TYPE "C" SIDEWALK PER SAN BERNARDINO COUNTY ROAD DEPARTMENT STANDARD PLAN NO. 109~~
10. CONSTRUCT TYPE A1-6 CURB PER CALTRANS 2006 STANDARD PLAN NO. A87A.
12. CONSTRUCT 0.20' ARHM OVER 0.30' HMA OVER 0.67' AGGREGATE BASE.
17. PROTECT IN PLACE EXISTING FACILITY.
21. REMOVE EXISTING.
37. RELOCATE EXISTING FACILITY BY OTHER.
46. CONSTRUCT CURB AND SIDEWALK AROUND EXIST MANHOLE PER DETAIL ON SHEET 12.
60. CONSTRUCT 6' MASONRY SPLIT-FACE BLOCK SOUND WALL ON SPREAD FOOTING (CASE 2) PER CALTRANS 2006 STANDARD PLAN NO. B15-1, DETAIL 13 ON SHEET 12 AND THE PROJECT SPECIFICATIONS.
63. ~~SLURRY SEAL~~
74. CONSTRUCT MODIFIED COMMERCIAL DRIVEWAY APPROACH PER DETAIL 15 ON SHEET 11A.
75. CONSTRUCT 0.58' HMA OVER 1.0' AGGREGATE BASE.
76. CONSTRUCT 0.50' HMA OVER 0.67' AGGREGATE BASE. 4
77. CONSTRUCT 4" SLEEVE FOR FUTURE IRRIGATION

REGISTERED PROFESSIONAL ENGINEER PAUL K. C. LAU No. 38388 EXP. DATE 03/31/15 CIVIL STATE OF CALIFORNIA

AS-BUILT
Paul Lau 06/10/14

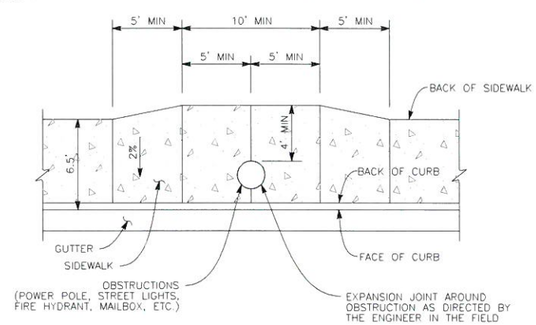

15 DETAIL – SIDEWALK WIDENING AROUND OBSTRUCTION
NOT TO SCALE

NOTE:
THE CONTRACTOR SHALL VERIFY ALL CONTROLLING FIELD DIMENSIONS BEFORE ORDERING OR FABRICATING ANY MATERIAL.

BENCHMARK
S.P.S.N. 00586
6"x 6' CONC POST WITH DRIVE PIN LOCATED 1 MILE S.E. ALONG S.F.RR FROM RR CROSSING AT BOULDER AVE., AT SOUTH END OF ST. HWY R/W FENCE, 23.5 FT. NORTH OF NORTH RAIL OF RR, 41 FT. EAST OF BOULDER AVE., NORTHBOUND TRAFFIC LANE, 12 FT. NORTH OF CULVERT HEADWALL.
ELEV. = 1353.459'

REGISTERED PROFESSIONAL ENGINEER EDWARD NG No. 46767 Exp. 6/30/13 CIVIL STATE OF CALIFORNIA

SUBMITTED BY: DATE: 10/4/11

PLANS PREPARED BY:
AECOM
901 VIA PIEMONTE, 5TH FLOOR
ONTARIO, CA 91764

REVISIONS

MARK	DESCRIPTION	APPR.	DATE
5	AS BUILT PLANS	PL	6/10/14
4	PAVEMENT LIMITS		
3	DRIVEWAY APPROACH		
2	SOUND WALL PILASTERS		
1	CCO #1		

CITY OF HIGHLAND

DESIGNED BY JY/NL | DRAWN BY JY/NL | CHECKED BY PL
SUBMITTED BY PAUL LAU
RECOMMENDED BY EDWARD NG 10/04/11
EDWARD NG DATE
R.C.E. 46767 EXP. 6-30-13
APPROVED BY 11-13-12
ERNEST WONG, CITY ENGINEER DATE
R.C.E. 37413 EXP. 6-30-12

BOULDER AVENUE BRIDGE OVER CITY CREEK (REPLACEMENT)

ROADWAY PLAN BOULDER AVE STA 118+50 TO 133+50

DRAWER NO.

SHEET 5R4 OF 37

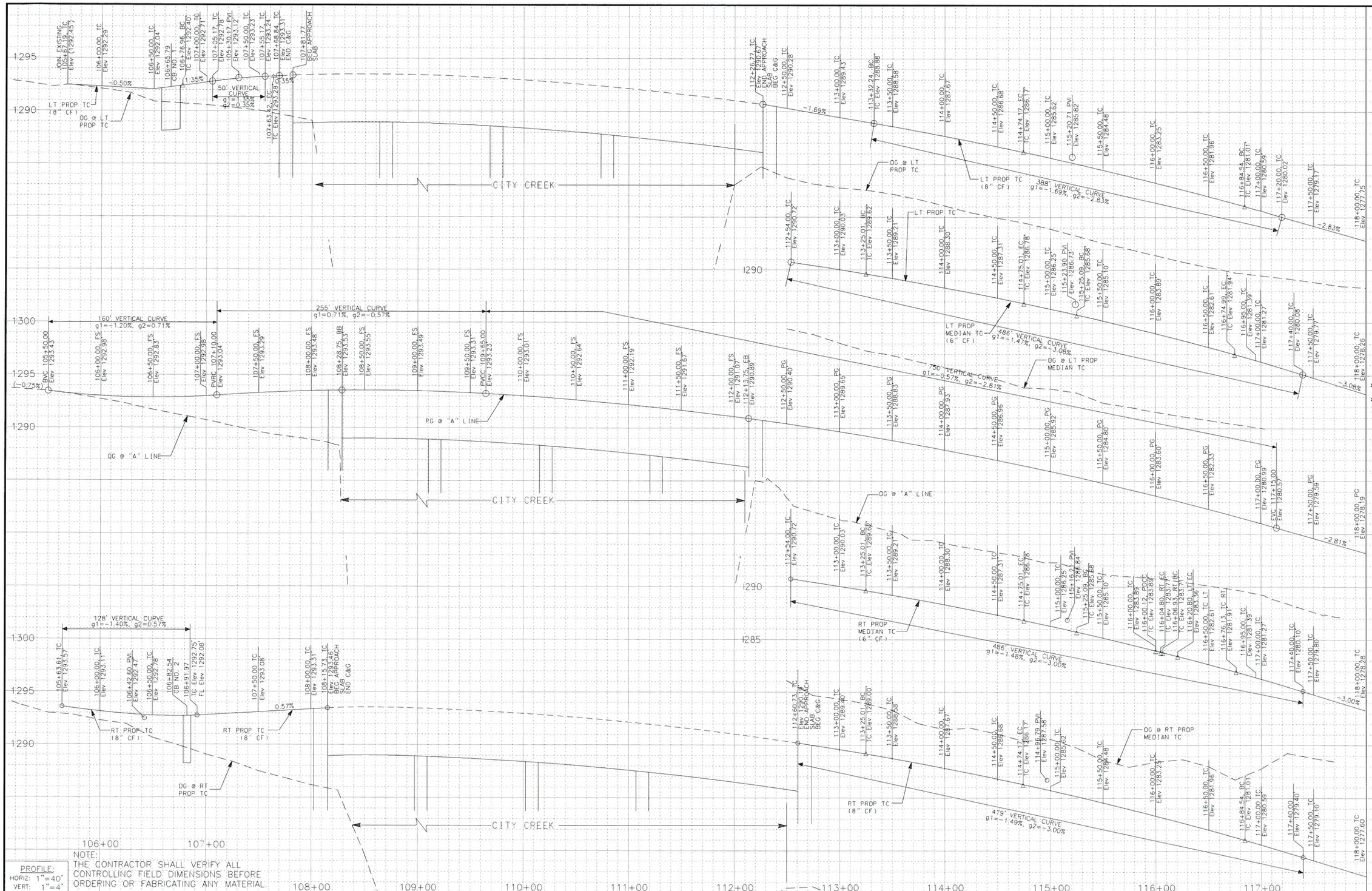

PROFILE:
HORIZ: 1"=40'
VERT: 1"=4'

NOTE:
THE CONTRACTOR SHALL VERIFY ALL CONTROLLING FIELD DIMENSIONS BEFORE ORDERING OR FABRICATING ANY MATERIAL.

REGISTERED PROFESSIONAL ENGINEER PAUL K. C. LAU No. 38388 EXP. DATE 06/30/13 CIVIL STATE OF CALIFORNIA

AS-BUILT
Per Original Plan
Paul Lau 06/10/14
NO AS-BUILT CHANGES

BENCHMARK
S.P.S.N. 00586
6'x 6' CONC POST WITH DRIVE PIN LOCATED 1 MILE S.E. ALONG S.F.RR FROM RR CROSSING AT BOULDER AVE., AT SOUTH END OF ST. HWY R/W FENCE, 23.5 FT. NORTH OF NORTH RAIL OF RR, 41 FT. EAST OF BOULDER AVE., NORTHBOUND TRAFFIC LANE, 12 FT. NORTH OF CULVERT HEADWALL.
ELEV. = 1353.459'

REGISTERED PROFESSIONAL ENGINEER EDWARD NG No. 46767 Exp. 6/30/13 CIVIL STATE OF CALIFORNIA

SUBMITTED BY: Ed Ng DATE: 10/4/11

PLANS PREPARED BY:
AECOM
901 VIA PIEMONTE, 5TH FLOOR
ONTARIO, CA 91764

REVISIONS

MARK	DESCRIPTION	APPR.	DATE

CITY OF HIGHLAND

DESIGNED BY	DRAWN BY	CHECKED BY
JY/NL	JY/NL	PL

SUBMITTED BY: PAUL LAU
RECOMMENDED BY: EDWARD NG 10/4/11
EDWARD NG DATE
R.C.E. 46767 EXP. 6-30-13

APPROVED BY: Ernest Wong 10-6-11
ERNEST WONG, CITY ENGINEER DATE
R.C.E. 37413 EXP. 6-30-12

BOULDER AVENUE BRIDGE OVER CITY CREEK (REPLACEMENT)

ROADWAY PROFILE BOULDER AVE STA 105+00 TO 118+00

DRAWER NO.

SHEET 6 OF 37

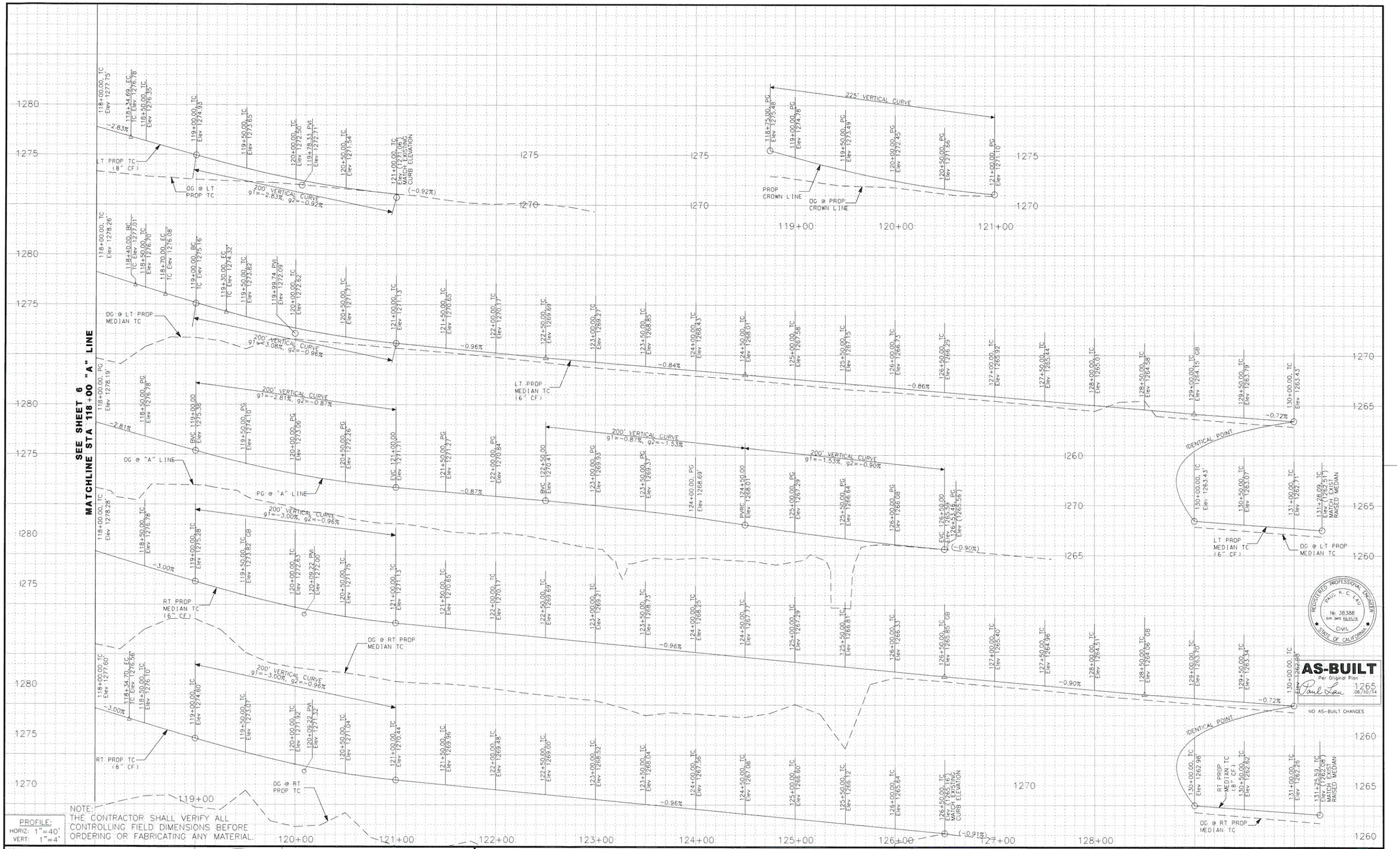

AS-BUILT
Per Original Plan
Paul Lau 06/10/14
NO AS-BUILT CHANGES

REGISTERED PROFESSIONAL ENGINEER PAUL K. C. LAU No. 38388 EXP. DATE 03/31/15 CIVIL STATE OF CALIFORNIA

NOTE:
THE CONTRACTOR SHALL VERIFY ALL CONTROLLING FIELD DIMENSIONS BEFORE ORDERING OR FABRICATING ANY MATERIAL.

PROFILE:
HORIZ: 1"=40'
VERT: 1"=4'

BENCHMARK
S.P.S.N. 00586
6"x 6" CONC POST WITH DRIVE PIN LOCATED 1 MILE S.E. ALONG S.F.RR FROM RR CROSSING AT BOULDER AVE., AT SOUTH END OF ST. HWY R/W FENCE, 23.5 FT. NORTH OF NORTH RAIL OF RR, 41 FT. EAST OF BOULDER AVE., NORTHBOUND TRAFFIC LANE, 12 FT. NORTH OF CULVERT HEADWALL.
ELEV. = 1353.459'

REGISTERED PROFESSIONAL ENGINEER EDWARD NG No. 46767 Exp. 6/30/13 CIVIL STATE OF CALIFORNIA

SUBMITTED BY: Ed Ng
DATE: 10/4/11

PLANS PREPARED BY:
AECOM
901 VIA PIEMONTE, 5TH FLOOR
ONTARIO, CA 91764

REVISIONS

MARK	DESCRIPTION	APPR.	DATE

CITY OF HIGHLAND

DESIGNED BY	DRAWN BY	CHECKED BY
JY/NL	JY/NL	PL

SUBMITTED BY: PAUL LAU
RECOMMENDED BY: EDWARD NG 10/04/11
EDWARD NG — DATE
R.C.E. 46767 EXP. 6-30-13

APPROVED BY: Ernest Wong 10.6.11
ERNEST WONG, CITY ENGINEER — DATE
R.C.E. 37413 EXP. 6-30-12

BOULDER AVENUE BRIDGE
OVER CITY CREEK (REPLACEMENT)

ROADWAY PROFILE
BOULDER AVE
STA 118+00 TO 131+50

DRAWER NO.

SHEET 7 OF 37

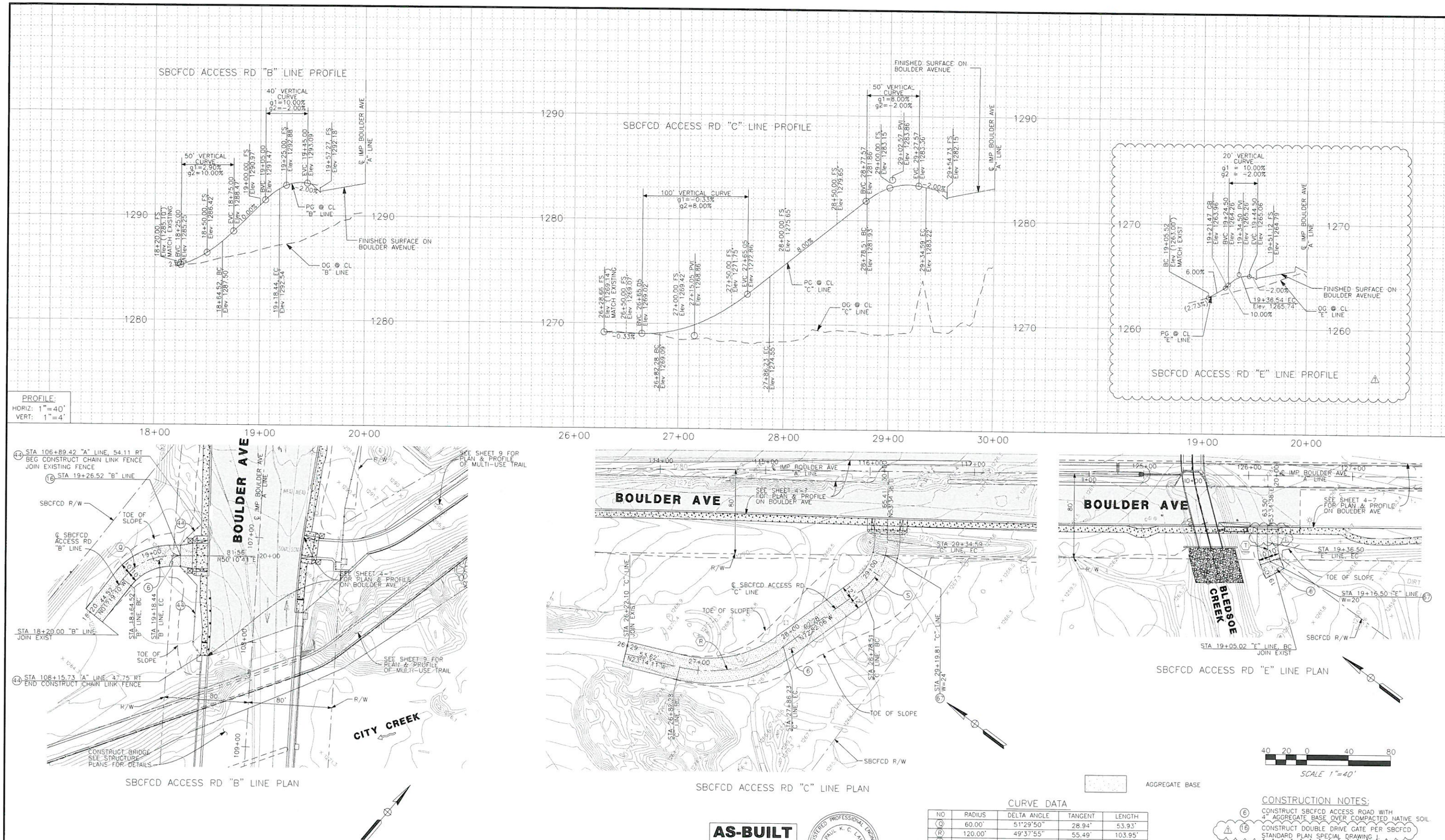

NOTE:
THE CONTRACTOR SHALL VERIFY ALL CONTROLLING FIELD DIMENSIONS BEFORE ORDERING OR FABRICATING ANY MATERIAL.

AS-BUILT
Paul Lau 06/10/14
NO AS-BUILT CHANGES

REGISTERED PROFESSIONAL ENGINEER PAUL K. C. LAU No. 38388 EXP. DATE 06/31/15 CIVIL STATE OF CALIFORNIA

CURVE DATA

NO	RADIUS	DELTA ANGLE	TANGENT	LENGTH
Q	60.00'	51°29'50"	28.94'	53.93'
R	120.00'	49°37'55"	55.49'	103.95'
S	60.00'	53°33'15"	30.28'	56.08'
T	60.00'	29°35'39"	15.85'	30.99'

CONSTRUCTION NOTES:

- (6) CONSTRUCT SBCFCD ACCESS ROAD WITH 4" AGGREGATE BASE OVER COMPACTED NATIVE SOIL.
- (16) CONSTRUCT DOUBLE DRIVE GATE PER SBCFCD STANDARD PLAN SPECIAL DRAWING.
- (44) CONSTRUCT CHAIN LINK FENCE PER CALTRANS 2006 STANDARD PLAN NO. A85.
- (6-7) CONSTRUCT PIPE GATE PER SBCFCD STANDARD PLAN NO. 209, W PER PLAN.

BENCHMARK
S.P.S.N. 00586
6'± 6' CONC POST WITH DRIVE PIN LOCATED 1 MILE S.E. ALONG S.F.RR FROM RR CROSSING AT BOULDER AVE., AT SOUTH END OF ST. HWY R/W FENCE, 23.5 FT. NORTH OF NORTH RAIL OF RR, 41 FT. EAST OF BOULDER AVE., NORTHBOUND TRAFFIC LANE, 12 FT. NORTH OF CULVERT HEADWALL.
ELEV. = 1353.459'

REGISTERED PROFESSIONAL ENGINEER EDWARD NG No. 46767 Exp. 6/30/13 CIVIL STATE OF CALIFORNIA

SUBMITTED BY: DATE: 10/4/11

PLANS PREPARED BY:
AECOM
901 VIA PIEMONTE, 5TH FLOOR
ONTARIO, CA 91764

REVISIONS

MARK	DESCRIPTION	APPR.	DATE
1	CCO #1		

CITY OF HIGHLAND

DESIGNED BY JY/NL | DRAWN BY JY/NL | CHECKED BY PL
SUBMITTED BY PAUL LAU
RECOMMENDED BY EDWARD NG 10/04/11
EDWARD NG R.C.E. 46767 EXP. 6-30-13 DATE
APPROVED BY Ernest Wong 1-13-12
ERNEST WONG, CITY ENGINEER R.C.E. 37413 EXP. 6-30-12 DATE

BOULDER AVENUE BRIDGE OVER CITY CREEK (REPLACEMENT)

PLAN AND PROFILE
SBCFCD ACCESS ROADS

DRAWER NO.

SHEET 8R1 OF 37

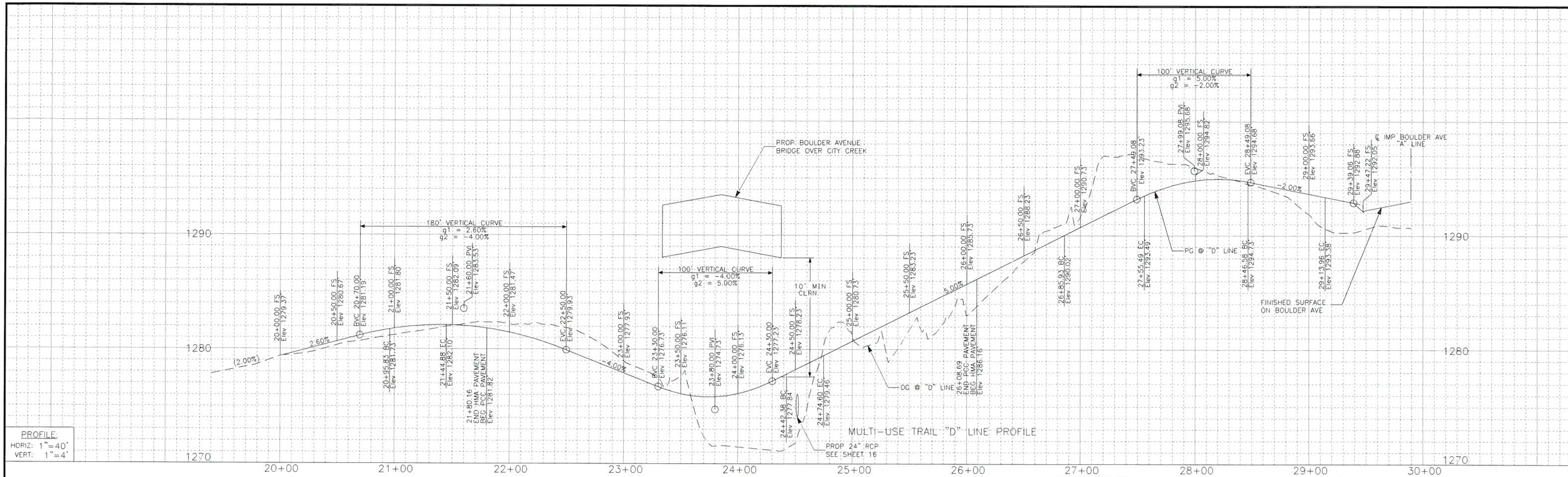

SCALE 1"=40'

40 20 0 40 80

CURVE DATA

NO	RADIUS	DELTA ANGLE	TANGENT	LENGTH
U	280.00'	10°02'12"	24.59'	49.05'
V	100.00'	18°27'30"	16.25'	32.22'
W	22.50'	177°08'48"	903.47'	69.57'
X	100.00'	38°36'19"	35.02'	67.38'

CONSTRUCTION NOTES:

- (7) CONSTRUCT ROCK SLOPE PROTECTION ON CITY CREEK PER DETAIL 5 ON SHEET 10.
- (32) CONSTRUCT PICKET FENCE RAILING PER DETAIL 2 ON SHEET 10.
- (33) CONSTRUCT PICKET RAILING DOUBLE DRIVE GATE PER DETAILS ON SHEET 10S. ⚠1
- (34) CONSTRUCT CONCRETE SLOPE PROTECTION AND CUT-OFF WALL PER DETAIL 4 ON SHEET 10.
- (35) CONSTRUCT 2" HMA OVER 6" AGGREGATE BASE ON MULTI-USE TRAIL.
- (36) CONSTRUCT 6" PCC OVER 4" AGGREGATE BASE ON MULTI-USE TRAIL.
- (68) CONSTRUCT PICKET RAILING DOUBLE DRIVE GATE PER DETAIL 1 ON SHEET 10.

HMA PAVEMENT

PCC PAVEMENT

ROCK SLOPE PROTECTION

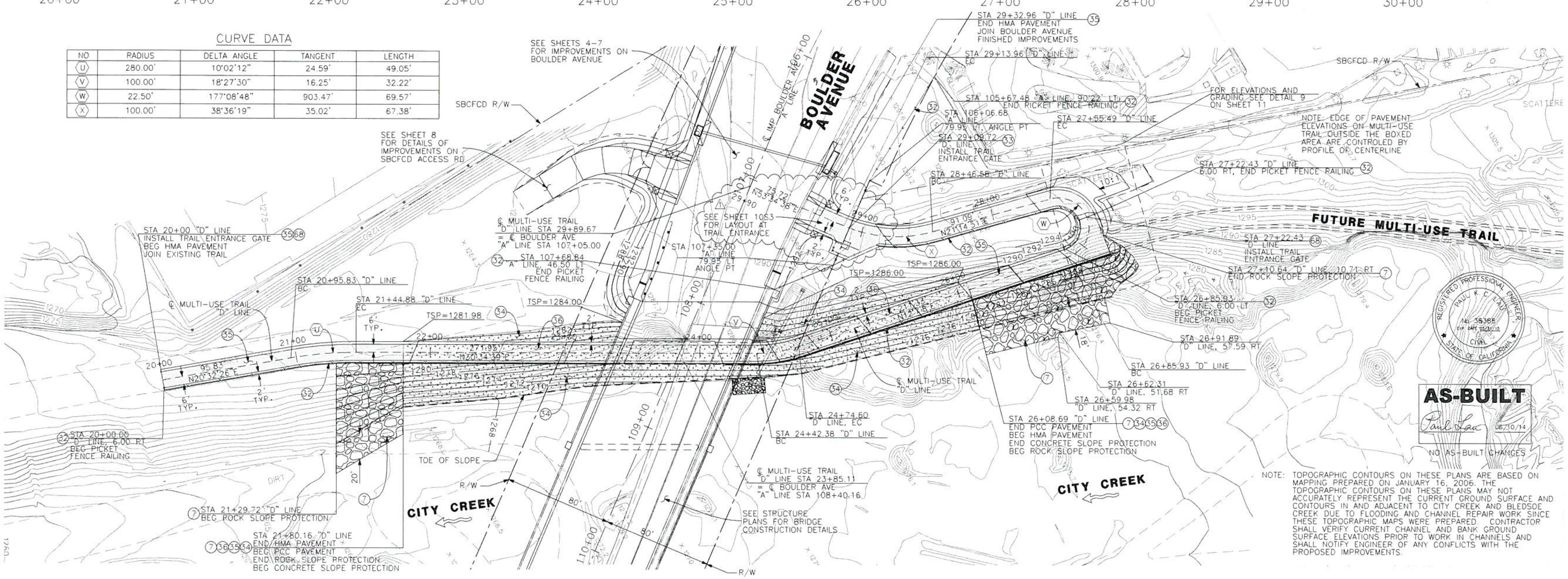

AS-BUILT
Paul Lau 06/10/14
NO AS-BUILT CHANGES

Seal: REGISTERED PROFESSIONAL ENGINEER PAUL K. C. LAU No. 38388 EXP. DATE 03/31/15 CIVIL STATE OF CALIFORNIA

NOTE: TOPOGRAPHIC CONTOURS ON THESE PLANS ARE BASED ON MAPPING PREPARED ON JANUARY 16, 2006. THE TOPOGRAPHIC CONTOURS ON THESE PLANS MAY NOT ACCURATELY REPRESENT THE CURRENT GROUND SURFACE AND CONTOURS IN AND ADJACENT TO CITY CREEK AND BLEDSOE CREEK DUE TO FLOODING AND CHANNEL REPAIR WORK SINCE THESE TOPOGRAPHIC MAPS WERE PREPARED. CONTRACTOR SHALL VERIFY CURRENT CHANNEL AND BANK GROUND SURFACE ELEVATIONS PRIOR TO WORK IN CHANNELS AND SHALL NOTIFY ENGINEER OF ANY CONFLICTS WITH THE PROPOSED IMPROVEMENTS.

NOTE:
THE CONTRACTOR SHALL VERIFY ALL CONTROLLING FIELD DIMENSIONS BEFORE ORDERING OR FABRICATING ANY MATERIAL.

BENCHMARK
S.P.S.N. 00586
6'x 6' CONC POST WITH DRIVE PIN LOCATED 1 MILE S.E. ALONG S.F.RR FROM RR CROSSING AT BOULDER AVE., AT SOUTH END OF ST. HWY R/W FENCE, 23.5 FT. NORTH OF NORTH RAIL OF RR, 41 FT. EAST OF BOULDER AVE., NORTHBOUND TRAFFIC LANE, 12 FT. NORTH OF CULVERT HEADWALL.
ELEV. = 1353.459'

Seal: REGISTERED PROFESSIONAL ENGINEER EDWARD NG No. 46767 Exp. 6/30/13 CIVIL STATE OF CALIFORNIA

SUBMITTED BY: DATE: 10/4/11

PLANS PREPARED BY:
AECOM
901 VIA PIEMONTE, 5TH FLOOR
ONTARIO, CA 91764

MARK	DESCRIPTION	APPR.	DATE
⚠1	TRAIL ADA ENTRY		

REVISIONS

CITY OF HIGHLAND

DESIGNED BY JY/NL | DRAWN BY JY/NL | CHECKED BY PL
SUBMITTED BY PAUL LAU
RECOMMENDED BY EDWARD NG 10/04/11
EDWARD NG R.C.E. 46767 EXP. 6-30-13 DATE
APPROVED BY Ernest Wong 10.6.11
ERNEST WONG, CITY ENGINEER DATE R.C.E. 37413 EXP. 6-30-12

BOULDER AVENUE BRIDGE OVER CITY CREEK (REPLACEMENT)

MULTI-USE TRAIL PLAN AND PROFILE

DRAWER NO.

SHEET 9R1 OF 37

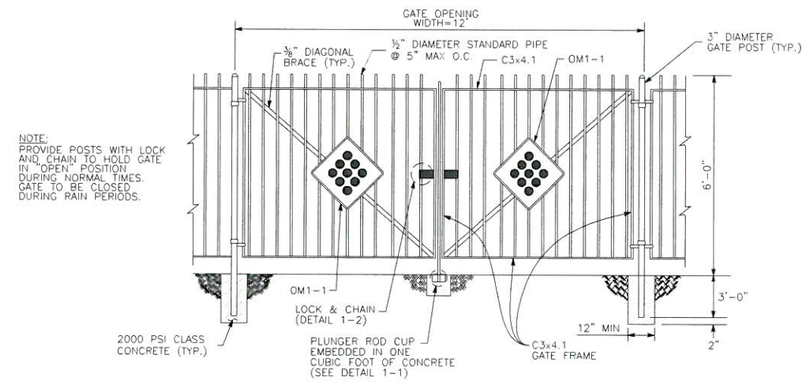

NOTE:
PROVIDE POSTS WITH LOCK AND CHAIN TO HOLD GATE IN "OPEN" POSITION DURING NORMAL TIMES. GATE TO BE CLOSED DURING RAIN PERIODS.

DETAIL 1
(68) MODIFIED PICKET RAILING DOUBLE DRIVE GATE
NO SCALE

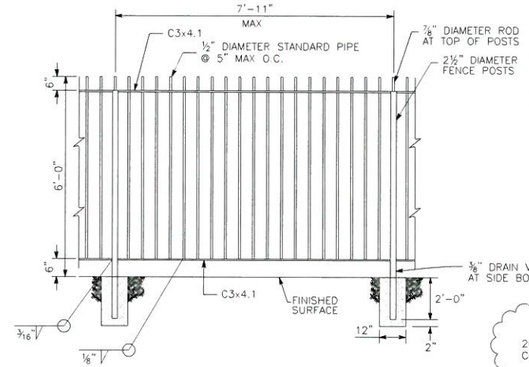

DETAIL 2
(32) MODIFIED PICKET FENCE RAILING
NO SCALE

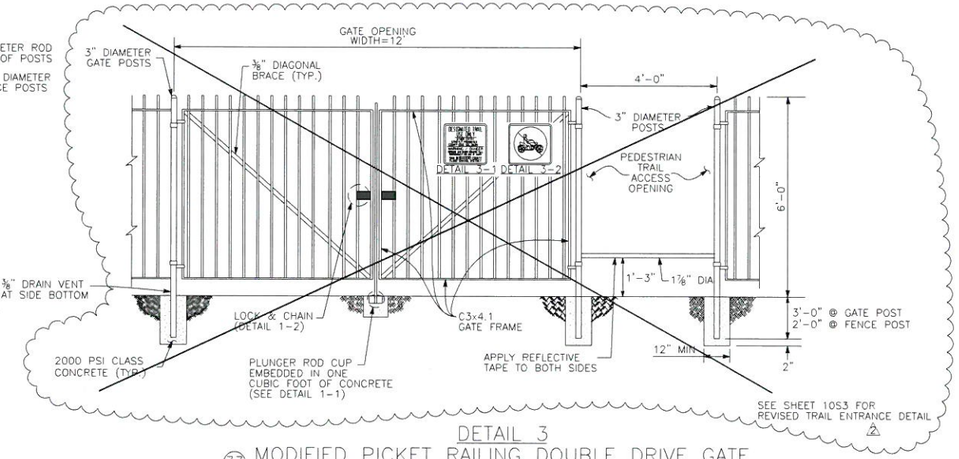

DETAIL 3
(33) MODIFIED PICKET RAILING DOUBLE DRIVE GATE WITH TRAIL ENTRANCE BARRIER
NO SCALE

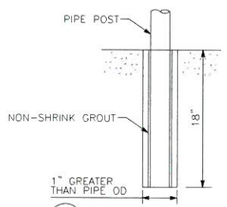

(4-2) POST POCKET
NO SCALE

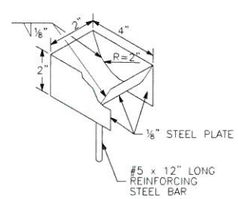

(1-1) PLUNGER ROD CUP
NO SCALE

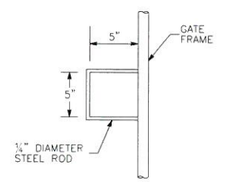

(1-2) LOCK & CHAIN
NO SCALE

(3-1) TRAIL USE (SIGN)
NO SCALE

(3-2) NO MOTORCYCLE (SIGN)
NO SCALE

NOTES:

1. PIPES, POSTS AND RAILINGS SHALL BE FINISHED WITH A SINGLE UNDERCOAT OF AN INORGANIC ZINC RICH PRIMER AND 2 FINISH COATS OF AN EXTERIOR GRADE LATEX PAINT (BLACK).
2. INSTALL SIGNS AT LOCATIONS SHOWN AND PER DETAIL.
3. CONTRACTOR SHALL SUBMIT SHOP DRAWINGS FOR FENCE, FENCE POST, FOOTINGS AND SWING GATES TO ENGINEER FOR APPROVAL PRIOR TO CONSTRUCTION.
4. ALL WELDS TO BE CLEAN AND FREE OF SPLATTERS, SHARP EDGES AND WIRE FRAGMENTS.

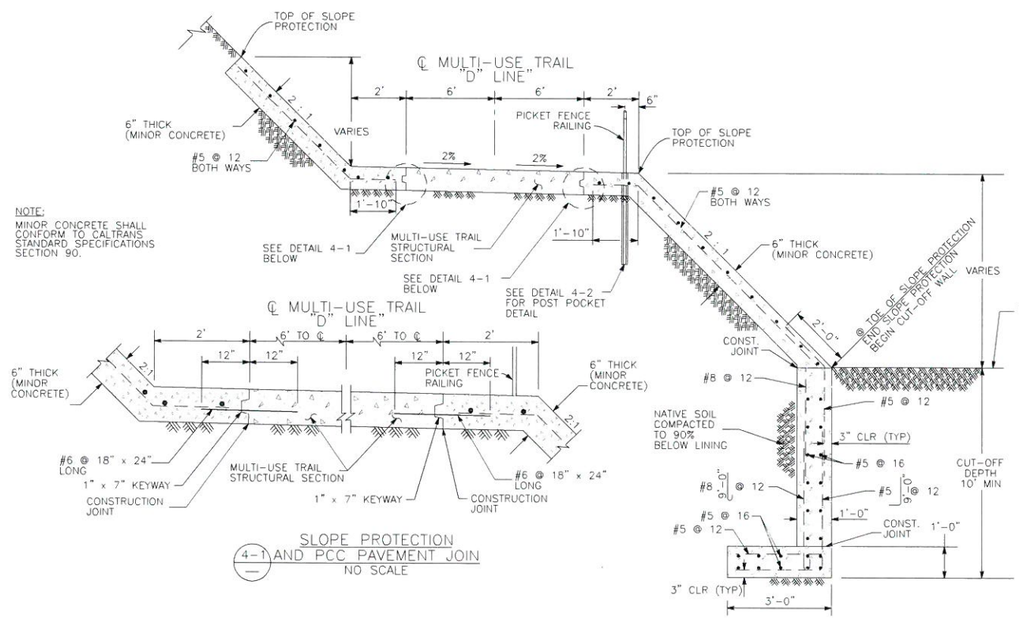

(4-1) SLOPE PROTECTION AND PCC PAVEMENT JOIN
NO SCALE

DETAIL 4
(34) CONCRETE SLOPE PROTECTION & CUT-OFF WALL AT CITY CREEK
NO SCALE

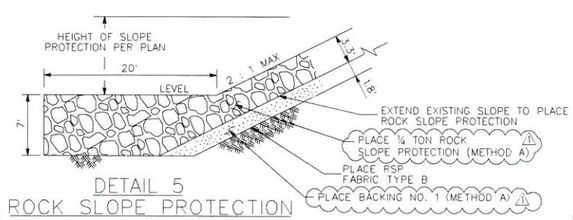

DETAIL 5
(7) ROCK SLOPE PROTECTION CITY CREEK
NO SCALE

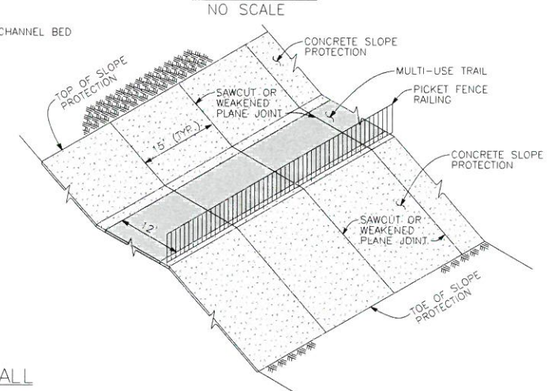

ISOMETRIC VIEW
NO SCALE

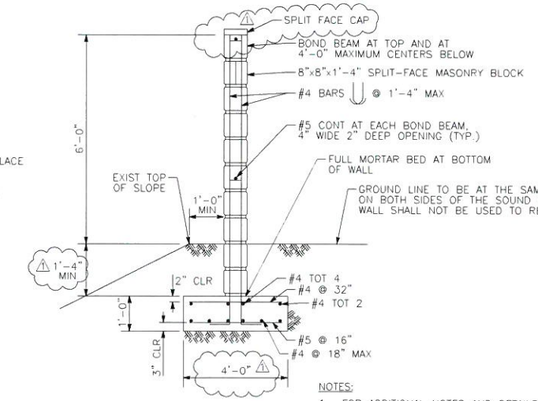

NOTES:

1. FOR ADDITIONAL NOTES AND DETAILS, SEE CALTRANS 2006 STANDARD PLAN NO. B15-1

DETAIL 13
MASONRY BLOCK SOUND WALL
(60) ON SPREAD FOOTING
NO SCALE

REGISTERED PROFESSIONAL ENGINEER PAUL K. C. LAU No. 38388 EXP. DATE 03/31/13 CIVIL STATE OF CALIFORNIA

AS-BUILT
Paul Lau 06/10/14
NO AS-BUILT CHANGES

NOTE:
THE CONTRACTOR SHALL VERIFY ALL CONTROLLING FIELD DIMENSIONS BEFORE ORDERING OR FABRICATING ANY MATERIAL.

BENCHMARK
S.P.S.N. 00586
6"x 6" CONC POST WITH DRIVE PIN LOCATED 1 MILE S.E. ALONG S.F.RR FROM RR CROSSING AT BOULDER AVE., AT SOUTH END OF ST. HWY R/W FENCE, 23.5 FT. NORTH OF NORTH RAIL OF RR, 41 FT. EAST OF BOULDER AVE., NORTHBOUND TRAFFIC LANE, 12 FT. NORTH OF CULVERT HEADWALL.
ELEV. = 1353.459'

REGISTERED PROFESSIONAL ENGINEER EDWARD NG No. 46767 Exp. 6/30/13 CIVIL STATE OF CALIFORNIA

SUBMITTED BY: DATE: 10/4/11

PLANS PREPARED BY:
AECOM
901 VIA PIEMONTE, 5TH FLOOR
ONTARIO, CA 91764

REVISIONS

MARK	DESCRIPTION	APPR.	DATE
2	TRAIL ADA ENTRY		
1	SOUNDWALL DETAIL REVISION		

CITY OF HIGHLAND

DESIGNED BY	DRAWN BY	CHECKED BY
JY/NL	JY/NL	PL

SUBMITTED BY: PAUL LAU
RECOMMENDED BY: EDWARD NG 10/04/11
EDWARD NG DATE
R.C.E. 46767 EXP. 6-30-13

APPROVED BY: 1-13-12
ERNEST WONG, CITY ENGINEER DATE
R.C.E. 37413 EXP. 6-30-12

BOULDER AVENUE BRIDGE OVER CITY CREEK (REPLACEMENT)

CONSTRUCTION DETAILS NO. 1

DRAWER NO.

SHEET 10R2 OF 37

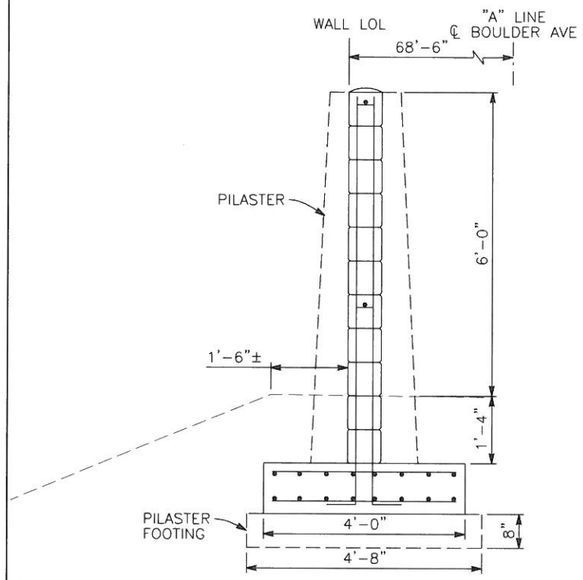

STA 126+60
NO SCALE

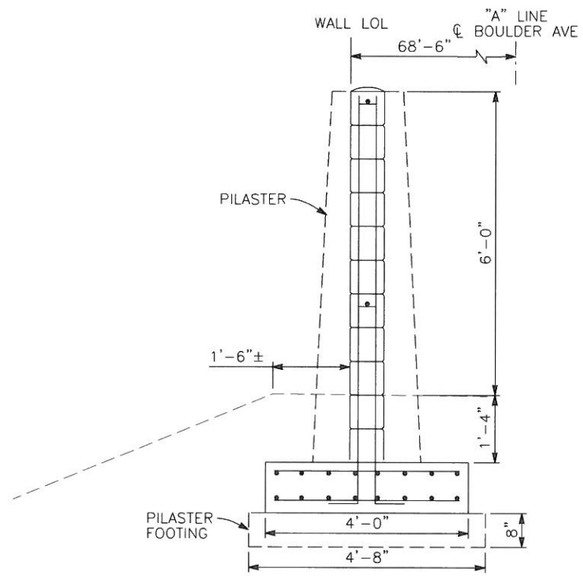

STA 127+56
NO SCALE

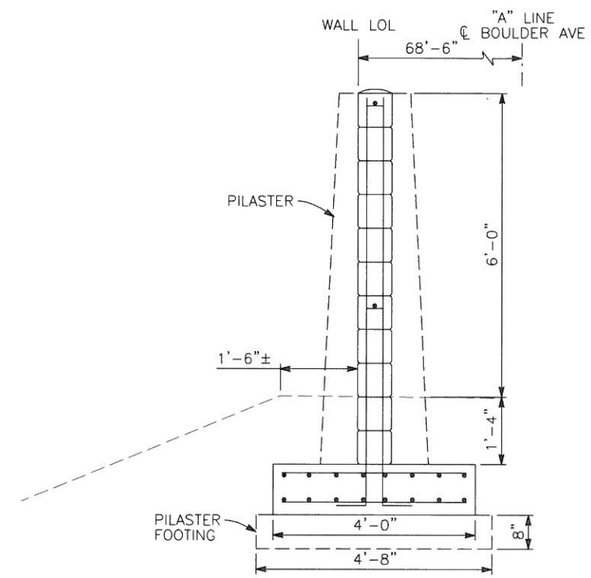

STA 128+52
NO SCALE

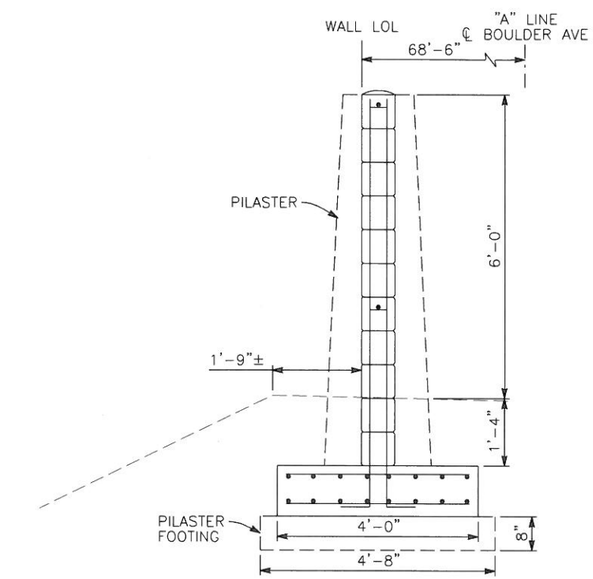

STA 129+48
NO SCALE

REGISTERED PROFESSIONAL ENGINEER
TODD W. DUDLEY
No. 39514
EXP. DATE 12/31/15
CIVIL
STATE OF CALIFORNIA

AS-BUILT
06/10/14
NO AS-BUILT CHANGES

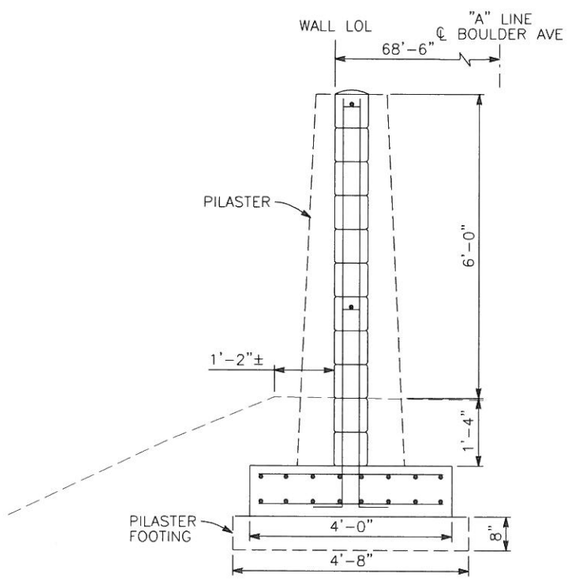

STA 130+44
NO SCALE

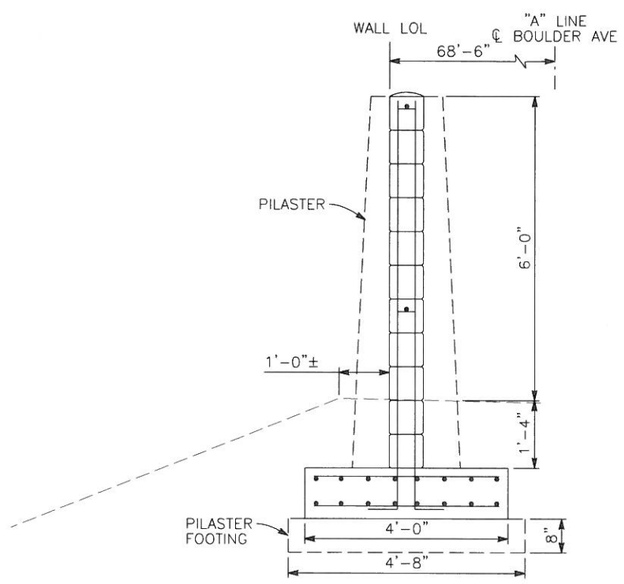

STA 131+40
NO SCALE

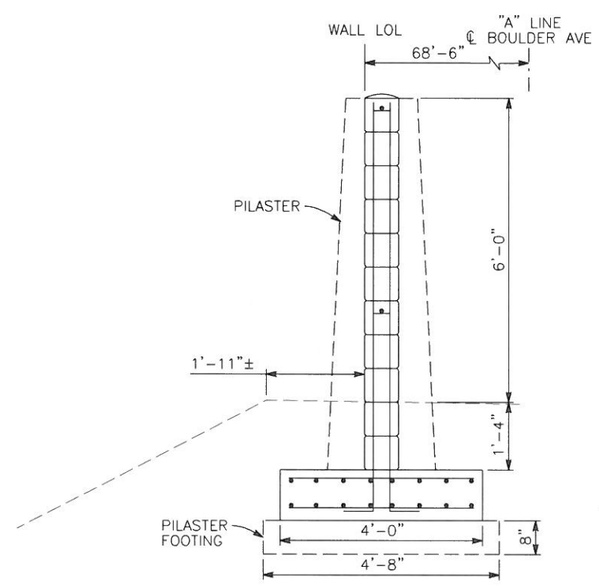

STA 132+36
NO SCALE

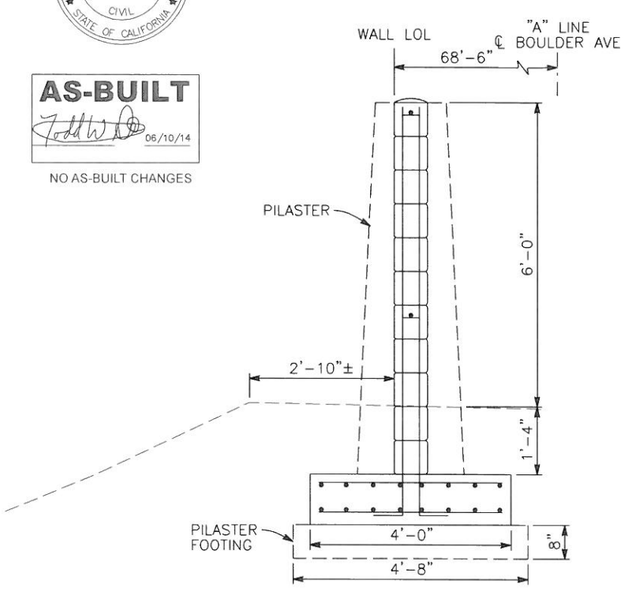

STA 133+32
NO SCALE

TYPICAL SECTIONS AT ℄ OF PILASTERS ALONG THE SOUND WALL

ADDED SHEET
SHEET 10A of 37

LEGEND

(A) APPLY CLEAR ANTI-GRAFFITI TREATMENT TO SURFACE

NOTE:

1. FOR SPLIT FACE MASONRY BLOCK SOUNDWALL DETAILS, SEE "CONSTRUCTION DETAILS NO. 1" SHEET.
2. CONTRACTOR SHALL FURNISH ARCHITECTURAL SAMPLES FOR APPROVAL BY THE CITY ENGINEER.

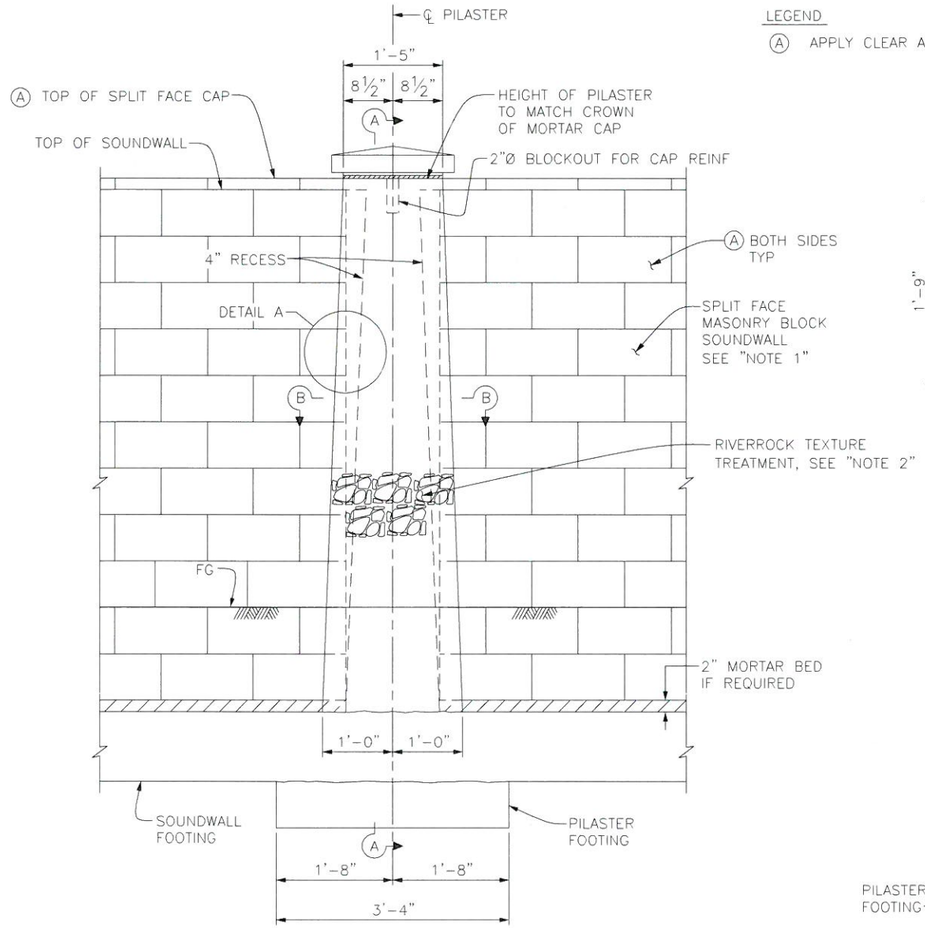

SOUNDWALL PILASTER ELEVATION

1" = 1'-0"

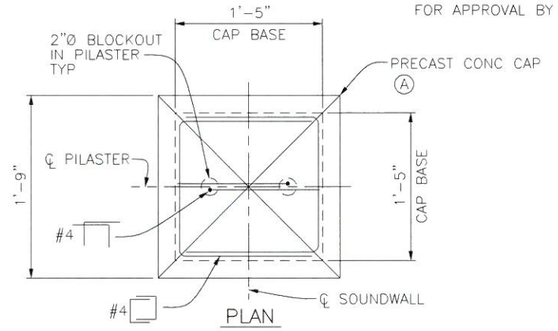

PLAN

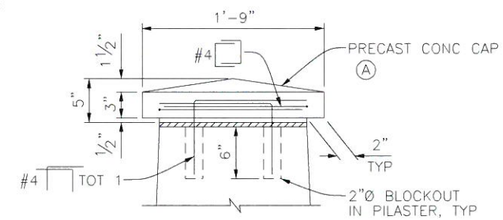

ELEVATION

PRECAST CONCRETE CAP

1 1/2" = 1'-0"

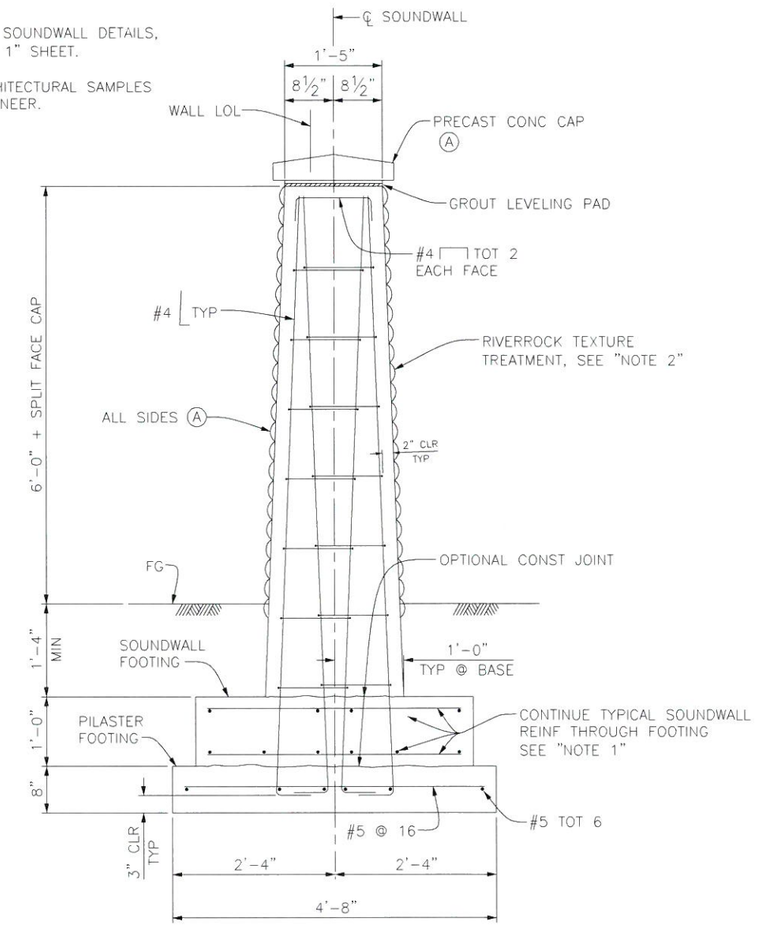

SECTION A-A

1" = 1'-0"

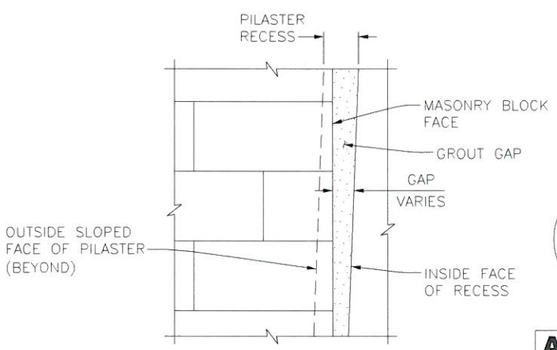

DETAIL A

1 1/2" = 1'-0"

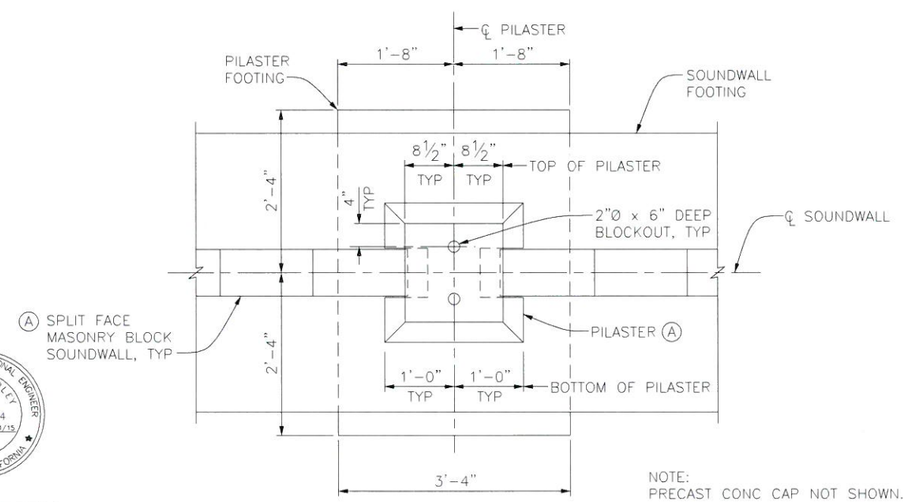

NOTE:
PRECAST CONC CAP NOT SHOWN.

SOUNDWALL PILASTER PLAN

1" = 1'-0"

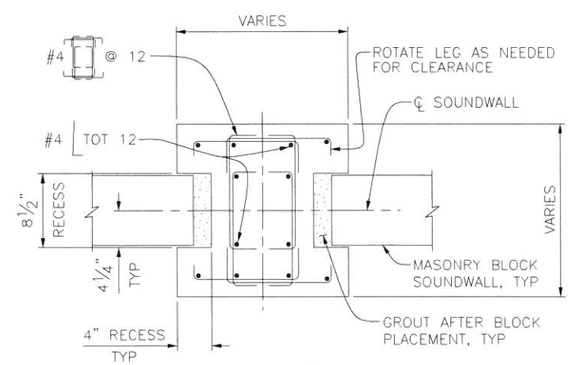

SECTION B-B

1 1/2" = 1'-0"

REGISTERED PROFESSIONAL ENGINEER TODD W. DUDLEY No. 39514 EXP. DATE 12/31/15 CIVIL STATE OF CALIFORNIA

AS-BUILT

Todd W. Dudley 06/10/14

NO AS-BUILT CHANGES

BENCHMARK

S.P.S.N. 00586
6'x 6' CONC POST WITH DRIVE PIN LOCATED
1 MILE S.E. ALONG S.F.RR FROM RR CROSSING
AT BOULDER AVE., AT SOUTH END OF ST. HWY
R/W FENCE, 23.5 FT. NORTH OF NORTH RAIL OF RR.
41 FT. EAST OF BOULDER AVE., NORTHBOUND
TRAFFIC LANE, 12 FT. NORTH OF CULVERT HEADWALL.
ELEV. = 1353.459'

REGISTERED PROFESSIONAL ENGINEER MOHAN S. CHAR No. 57894 Exp. 6/30/14 CIVIL STATE OF CALIFORNIA

SUBMITTED BY: Mchar DATE: 10-29-12

PLANS PREPARED BY:

AECOM
901 VIA PIEMONTE, 5TH FLOOR
ONTARIO, CALIFORNIA 91764

REVISIONS

MARK	DESCRIPTION	APPR.	DATE

CITY OF HIGHLAND

DESIGNED BY MS | DRAWN BY RA | CHECKED BY MC

SUBMITTED BY MOHAN CHAR

RECOMMENDED BY MOHAN CHAR 10/29/12
MOHAN S. CHAR DATE
R.C.E. 57894 EXP. 6-30-14

APPROVED BY Ernest Wong 10-30-12
ERNEST WONG, CITY ENGINEER DATE
R.C.E. 37413 EXP. 6-30-14

BOULDER AVENUE BRIDGE OVER CITY CREEK (REPLACEMENT)

SOUNDWALL PILASTER DETAILS

DRAWER NO.

SHEET 10S1 OF 37

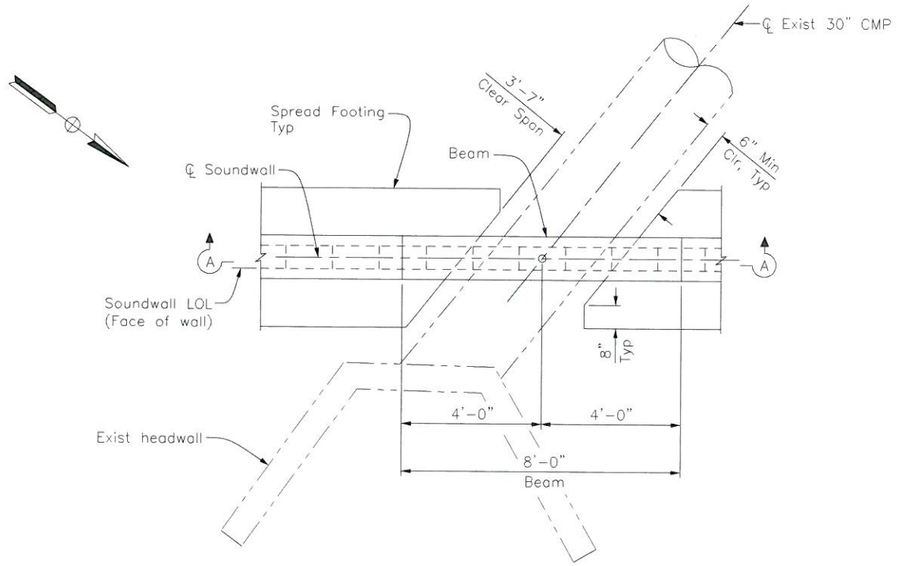

PLAN
½" = 1'-0"

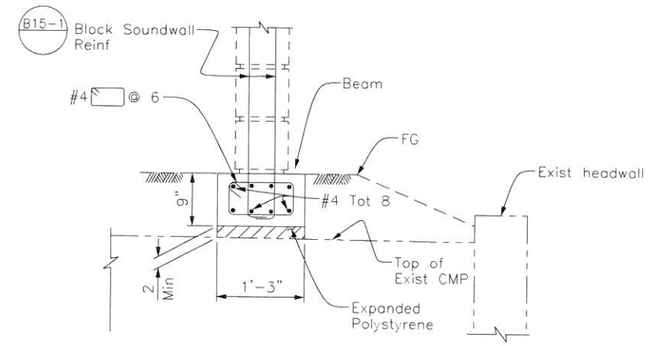

SECTION B-B
1" = 1'-0"

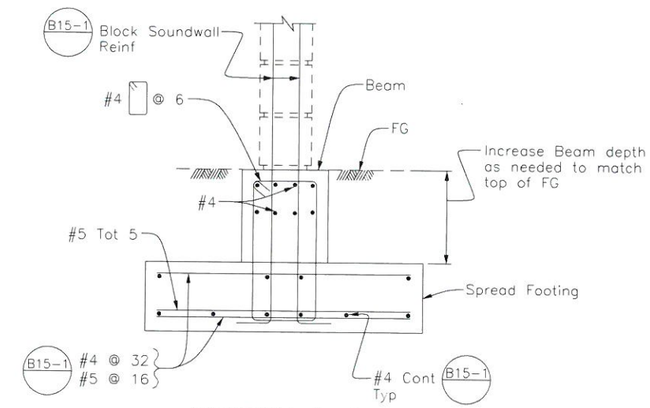

SECTION C-C
1" = 1'-0"

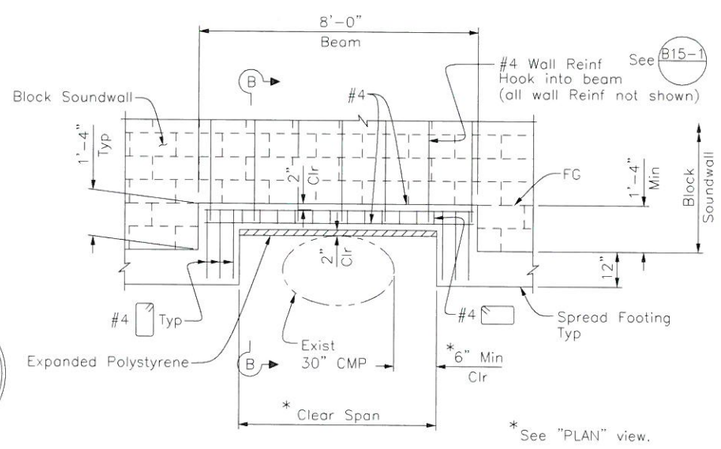

SECTION A-A
(CENTERLINE OF SOUNDWALL)
½" = 1'-0"

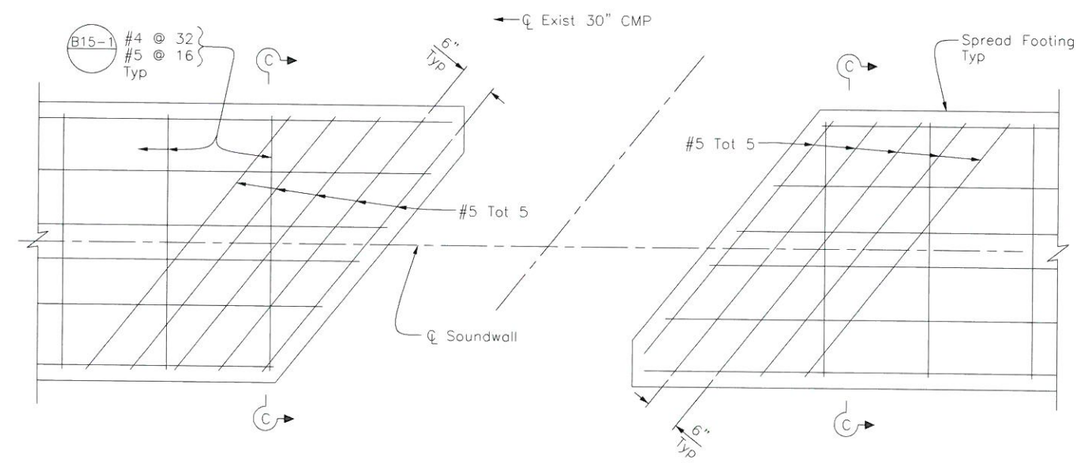

FOOTING REIFORCEMENT DETAIL
1" = 1'-0"

Note:
For reinforcing not shown see "Section C-C"

REGISTERED PROFESSIONAL ENGINEER TODD W. DUDLEY No 39514 EXP. DATE 12/31/15 CIVIL STATE OF CALIFORNIA

AS-BUILT
Todd W. Dudley 06/10/14
NO AS-BUILT CHANGES

BENCHMARK
S.P.S.N. 00586
6"x 6" CONC POST WITH DRIVE PIN LOCATED 1 MILE S.E. ALONG S.F.RR FROM RR CROSSING AT BOULDER AVE., AT SOUTH END OF ST. HWY R/W FENCE, 23.5 FT. NORTH OF NORTH RAIL OF RR, 41 FT. EAST OF BOULDER AVE., NORTHBOUND TRAFFIC LANE, 12 FT. NORTH OF CULVERT HEADWALL.
ELEV. = 1353.459'

REGISTERED PROFESSIONAL ENGINEER TODD W. DUDLEY No 39514 Exp 12/31/13 CIVIL STATE OF CALIFORNIA

SUBMITTED BY: Todd W. Dudley DATE: 10-29-12

PLANS PREPARED BY:
AECOM
901 VIA PIEMONTE, 5TH FLOOR
ONTARIO, CALIFORNIA 91764

REVISIONS

MARK	DESCRIPTION	APPR.	DATE

CITY OF HIGHLAND

DESIGNED BY	DRAWN BY	CHECKED BY
TD	RA	KG

SUBMITTED BY: TODD DUDLEY
RECOMMENDED BY: MOHAN CHAR 10-29-12
MOHAN S. CHAR R.C.E. 57894 EXP. 6-30-14 DATE
APPROVED BY: Ernie Wong 10-30-12
ERNEST WONG, CITY ENGINEER R.C.E. 37413 EXP. 6-30-14 DATE

BOULDER AVENUE BRIDGE OVER CITY CREEK (REPLACEMENT)

BEAM SUPPORT (FOR SOUNDWALL)

DRAWER NO.

SHEET 10S2 OF 37

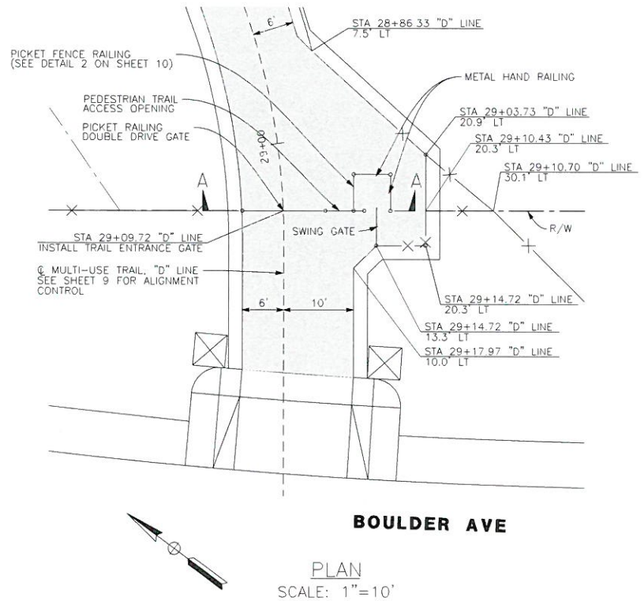

PLAN
SCALE: 1"=10'

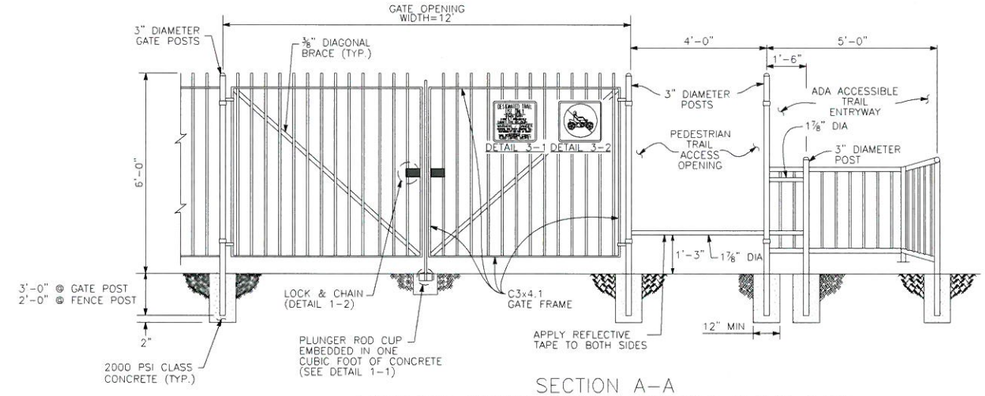

SECTION A–A
MODIFIED PICKET RAILING DOUBLE DRIVE GATE
WITH TRAIL ENTRANCE BARRIER AND ADA ACCESSIBLE ENTRYWAY
NO SCALE

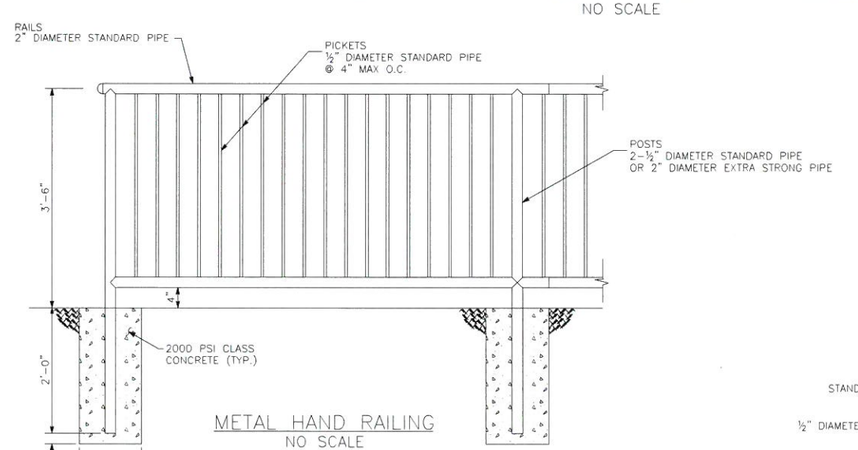

METAL HAND RAILING
NO SCALE

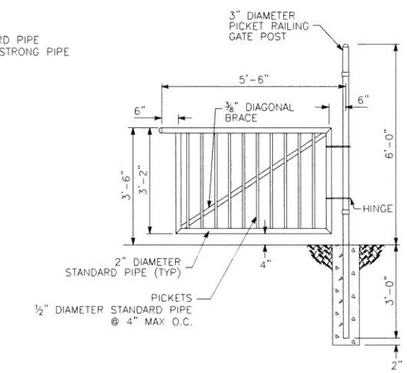

SWING GATE
NO SCALE

NOTES:

1. RAILS, POSTS, AND PICKETS SHALL BE GALVANIZED STEEL PIPE.
2. CUT THE PIPE TO PROVIDE A CLOSE FIT-UP OF THE JOINTS.
3. USE 100% PENETRATION WELDS FOR PIPE CONNECTIONS.
4. PAINT GATE WITH A SINGLE UNDERCOAT OF AN INORGANIC RICH PRIMER AND 2 FINISH COATS OF AN EXTERIOR GRADE LATEX PAINT (BLACK) AFTER FABRICATION.
5. GATE HINGES SHALL BE HEAVY DUTY, MALLEABLE IRON OR STEEL, INDUSTRIAL SERVICE TYPE, WITH 270° SWING.
6. THE FORCE FOR PUSHING OR PULLING OPEN THE GATE SHALL BE 5 POUNDS MAXIMUM.

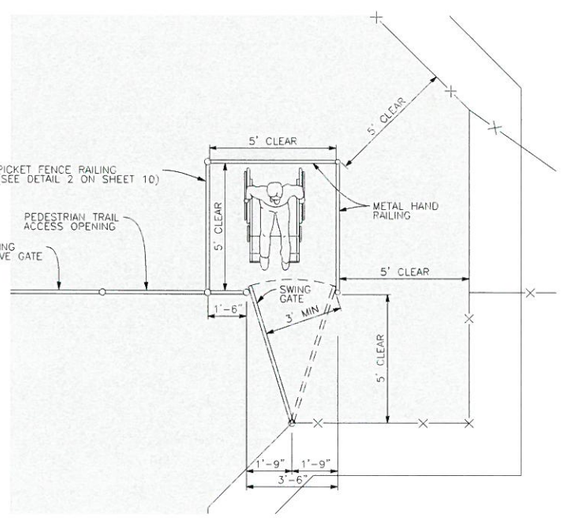

PLAN
NO SCALE

ADA ACCESSIBLE
TRAIL ENTRYWAY

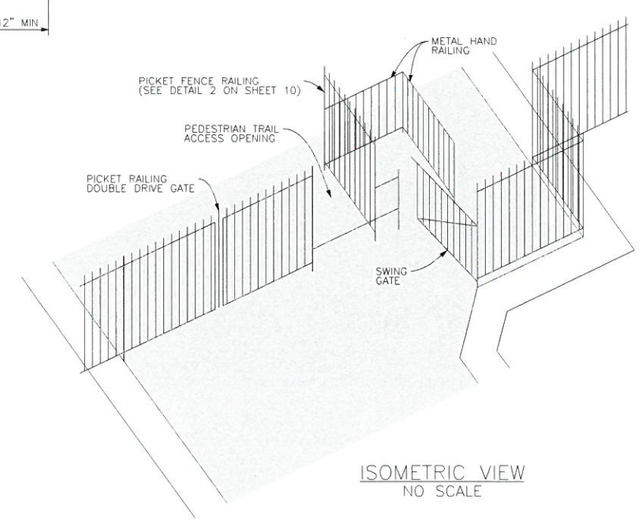

ISOMETRIC VIEW
NO SCALE

REGISTERED PROFESSIONAL ENGINEER
PAUL K. C. LAU
No. 38388
EXP. DATE 03/31/13
CIVIL
STATE OF CALIFORNIA

AS-BUILT
Per Original Plan
Paul Lau 06/10/14

GENERAL NOTES:

1. PIPES, POSTS AND RAILINGS SHALL BE FINISHED WITH A SINGLE UNDERCOAT OF AN INORGANIC ZINC RICH PRIMER AND 2 FINISH COATS OF AN EXTERIOR GRADE LATEX PAINT (BLACK).
2. INSTALL SIGNS AT LOCATIONS SHOWN AND PER DETAIL.
3. CONTRACTOR SHALL SUBMIT SHOP DRAWINGS FOR FENCE, FENCE POST, FOOTINGS AND SWING GATES TO ENGINEER FOR APPROVAL PRIOR TO CONSTRUCTION.
4. ALL WELDS TO BE CLEAN AND FREE OF SPLATTERS, SHARP EDGES AND WIRE FRAGMENTS.

NOTE:
THE CONTRACTOR SHALL VERIFY ALL CONTROLLING FIELD DIMENSIONS BEFORE ORDERING OR FABRICATING ANY MATERIAL.

BENCHMARK
S.P.S.N. 00586
6"x 6" CONC POST WITH DRIVE PIN LOCATED 1 MILE S.E. ALONG S.F.RR FROM RR CROSSING AT BOULDER AVE., AT SOUTH END OF ST. HWY R/W FENCE, 23.5 FT. NORTH OF NORTH RAIL OF RR, 41 FT. EAST OF BOULDER AVE., NORTHBOUND TRAFFIC LANE, 12 FT. NORTH OF CULVERT HEADWALL.
ELEV. = 1353.459'

REGISTERED PROFESSIONAL ENGINEER
EDWARD NG
No. 46767
Exp. 6/30/13
CIVIL
STATE OF CALIFORNIA

SUBMITTED BY: DATE: 10/4/11

PLANS PREPARED BY:
AECOM
901 VIA PIEMONTE, 5TH FLOOR
ONTARIO, CA 91764

REVISIONS

MARK	DESCRIPTION	APPR.	DATE
1	TRAIL ADA ENTRY		

CITY OF HIGHLAND

DESIGNED BY	DRAWN BY	CHECKED BY
JY/NL	JY/NL	PL

SUBMITTED BY: PAUL LAU
RECOMMENDED BY: EDWARD NG 10/04/11
EDWARD NG DATE
R.C.E. 46767 EXP. 6-30-13

APPROVED BY: 10.6.11
ERNEST WONG, CITY ENGINEER DATE
R.C.E. 37413 EXP. 6-30-12

BOULDER AVENUE BRIDGE OVER CITY CREEK (REPLACEMENT)

CONSTRUCTION DETAILS TRAIL ENTRANCE GATE

DRAWER NO.

SHEET 10S3 OF 37

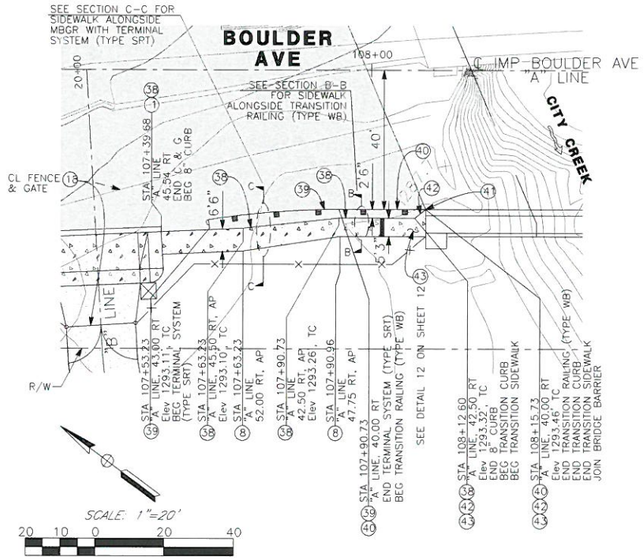

DETAIL 6
BRIDGE BARRIER END TREATMENT (1 OF 2)

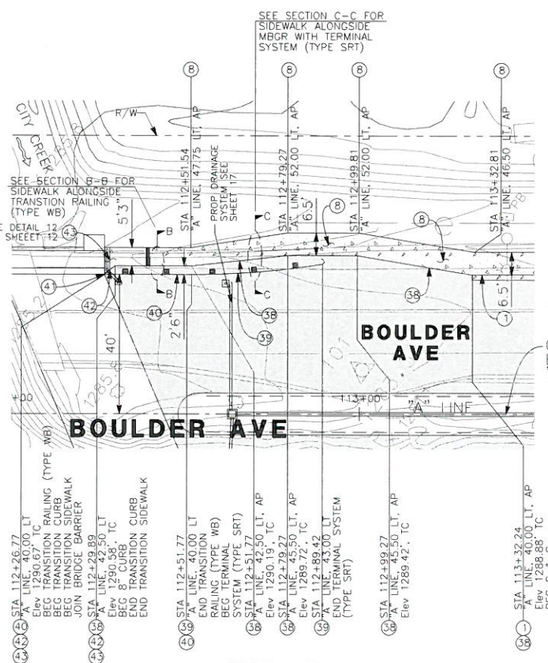

DETAIL 7
BRIDGE BARRIER END TREATMENT (2 OF 2)

NOTE:
THE CONTRACTOR SHALL VERIFY ALL CONTROLLING FIELD DIMENSIONS BEFORE ORDERING OR FABRICATING ANY MATERIAL.

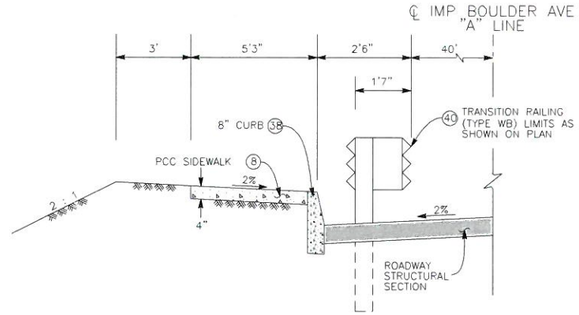

SECTION B-B
SIDEWALK ALONGSIDE
TRANSITION RAILING (TYPE WB)
NO SCALE

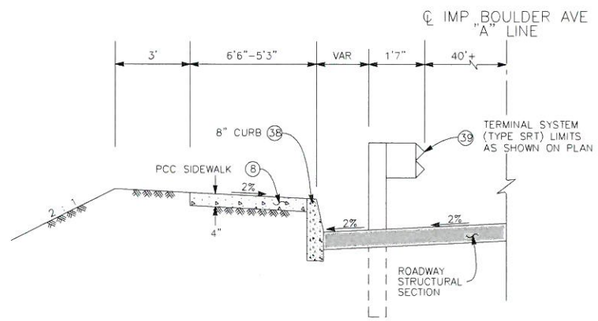

SECTION C-C
SIDEWALK ALONGSIDE
MBGR WITH TERMINAL SYSTEM (TYPE SRT)
NO SCALE

SCALE: 1"=20'
20 10 0 20 40

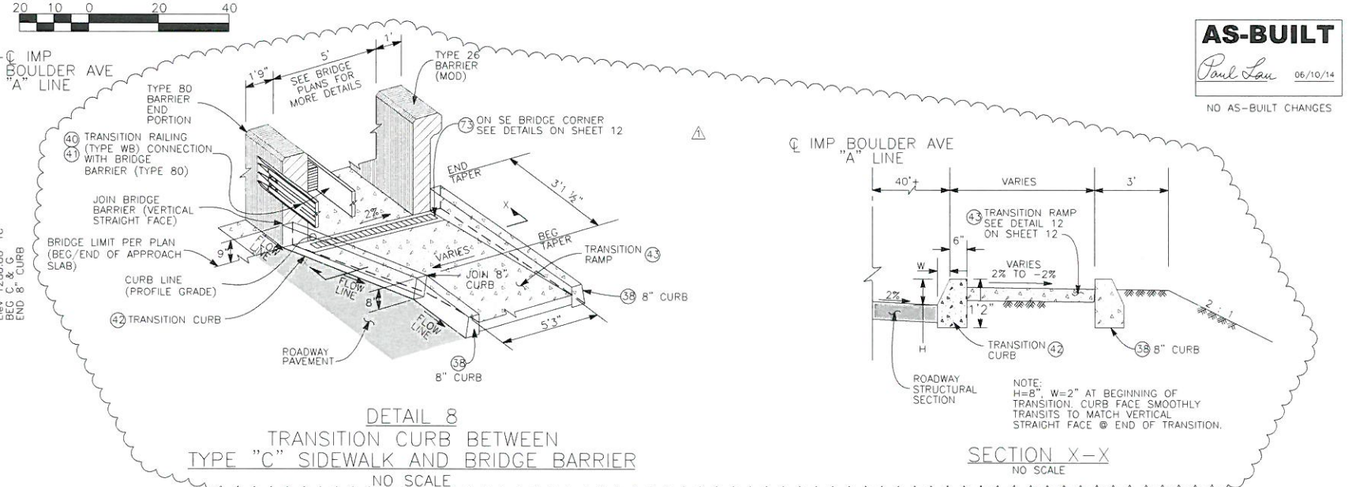

DETAIL 8
TRANSITION CURB BETWEEN
TYPE "C" SIDEWALK AND BRIDGE BARRIER
NO SCALE

SECTION X-X
NO SCALE

SCALE: 1"=20'
20 10 0 20 40

CURVE DATA

NO	RADIUS	DELTA ANGLE	TANGENT	LENGTH
(Y)	16.50'	177°08'48"	662.54'	51.01'
(Z)	30.50'	82°40'29"	26.83'	44.01'

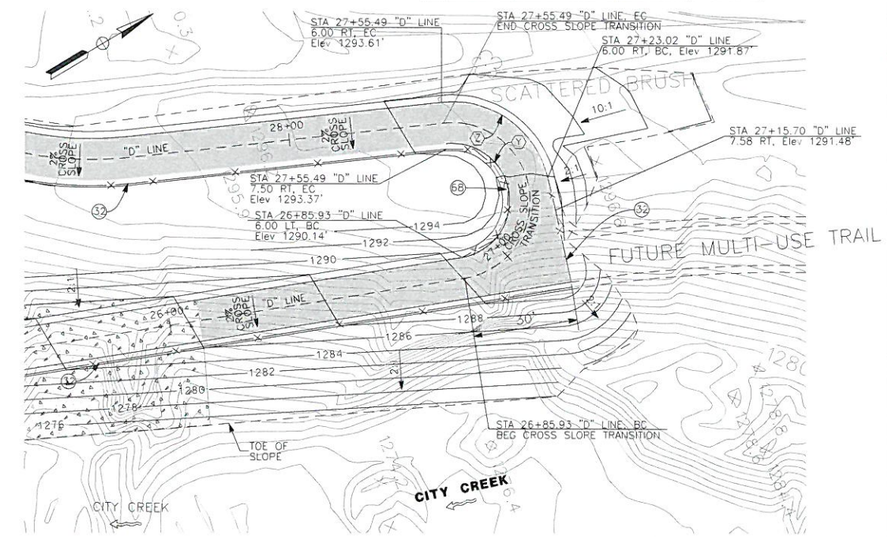

DETAIL 9
MULTI-USE TRAIL EDGE OF PAVEMENT
ELEVATIONS AND GRADING DETAIL
@ CROSS SLOPE TRANSITION AREA

REGISTERED PROFESSIONAL ENGINEER PAUL K. C. LAU No. 38388 EXP. DATE 12/31/15 CIVIL STATE OF CALIFORNIA

AS-BUILT
Paul Lau 06/10/14
NO AS-BUILT CHANGES

CONSTRUCTION NOTES:

1. CONSTRUCT 8" CURB AND GUTTER PER SAN BERNARDINO COUNTY ROAD DEPARTMENT STANDARD PLAN NO. 115.
8. CONSTRUCT TYPE "C" SIDEWALK PER SAN BERNARDINO COUNTY ROAD DEPARTMENT STANDARD PLAN NO. 109.
18. RELOCATE EXISTING IMPROVEMENT PER PLAN.
32. CONSTRUCT PICKET FENCE RAILING PER DETAIL 2 ON SHEET 10.
38. CONSTRUCT TYPE A1-8 CURB PER CALTRANS 2006 STANDARD PLAN NO. A87A.
39. CONSTRUCT METAL BEAM GUARD RAILING PER CALTRANS 2006 STANDARD PLAN NO. A77E1, TYPE 11B LAYOUT WITH TERMINAL SYSTEM (TYPE SRT) PER CALTRANS 2006 STANDARD PLAN NO. A77L1.
40. CONSTRUCT METAL BEAM GUARD RAILING TRANSITION RAILING (TYPE WB) PER CALTRANS 2006 STANDARD PLAN NO. A77J4.
41. CONSTRUCT METAL BEAM GUARD RAILING CONNECTION TO BRIDGE BARRIER (TYPE 80) PER CALTRANS 2006 STANDARD PLAN NO. A77J1 AND A77J2.
42. CONSTRUCT TRANSITION CURB (WITH CLASS B CONCRETE) BETWEEN BRIDGE BARRIER (TYPE 80) AND 8" CURB PER DETAIL 8 ON SHEET 11.
43. CONSTRUCT TRANSITION RAMP (WITH CLASS B CONCRETE) BETWEEN TYPE "C" SIDEWALK AND BRIDGE BARRIER PER DETAILS ON SHEET 12.
68. CONSTRUCT PICKET RAILING DOUBLE DRIVE GATE PER DETAIL 1 ON SHEET 10.
73. CONSTRUCT GRATED LINE DRAIN WITH BOTTOM OUTLET PLATE & HEEL RESISTANT GRATE PER CALTRANS 2006 STANDARD PLAN NO. D98C.

HMA PAVEMENT
PCC (PAVEMENT, SIDEWALK, DRIVEWAY)

BENCHMARK
S.P.S.N. 00586
6'x 6' CONC POST WITH DRIVE PIN LOCATED 1 MILE S.E. ALONG S.F.RR FROM RR CROSSING AT BOULDER AVE., AT SOUTH END OF ST. HWY R/W FENCE, 23.5 FT. NORTH OF NORTH RAIL OF RR, 41 FT. EAST OF BOULDER AVE., NORTHBOUND TRAFFIC LANE, 12 FT. NORTH OF CULVERT HEADWALL. ELEV. = 1353.459'

REGISTERED PROFESSIONAL ENGINEER EDWARD NG No. 46767 Exp. 6/30/13 CIVIL STATE OF CALIFORNIA

SUBMITTED BY: DATE: 10/4/11

PLANS PREPARED BY:
AECOM
901 VIA PIEMONTE, 5TH FLOOR
ONTARIO, CA 91764

REVISIONS

MARK	DESCRIPTION	APPR.	DATE
1	CCO #1		

CITY OF HIGHLAND

DESIGNED BY JY/NL | DRAWN BY JY/NL | CHECKED BY PL
SUBMITTED BY PAUL LAU
RECOMMENDED BY EDWARD NG 10/04/11
EDWARD NG R.C.E. 46767 EXP. 6-30-13 DATE
APPROVED BY Ernest Wong 1.13.12
ERNEST WONG, CITY ENGINEER R.C.E. 37413 EXP. 6-30-12 DATE

BOULDER AVENUE BRIDGE
OVER CITY CREEK (REPLACEMENT)

CONSTRUCTION DETAILS NO. 2

DRAWER NO.
SHEET 11 R1 OF 37

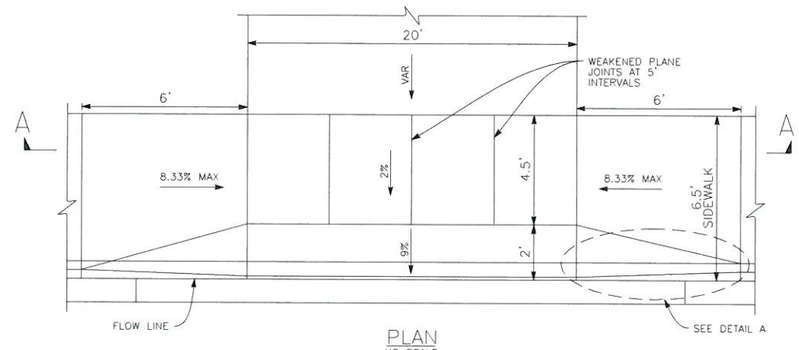

PLAN
NO SCALE

SECTION A–A
NO SCALE

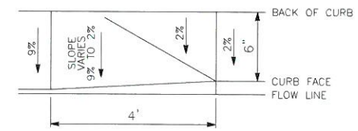

DETAIL A
NO SCALE

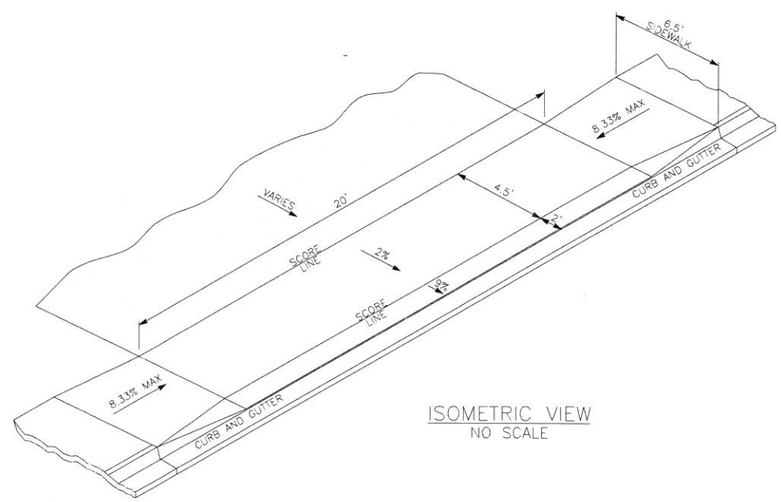

ISOMETRIC VIEW
NO SCALE

NOTES:

1. DRIVEWAY APPROACH SHALL BE 6" P.C.C. CALTRANS CLASS "B" CONCRETE.
2. RELATIVE COMPACTION OF SUBGRADE UNDER DRIVEWAY APPROACH SHALL BE 95% (MIN.)
3. USE 6 MIL PLASTIC SHEETING.

DETAIL 15
(74) MODIFIED COMMERCIAL DRIVEWAY APPROACH
AT SBCFCD ACCESS ROAD "E"
NO SCALE

REGISTERED PROFESSIONAL ENGINEER PAUL K. C. LAU No. 38388 EXP. DATE 03/31/13 CIVIL STATE OF CALIFORNIA

AS-BUILT
Per Original Plan
Paul Lau 06/10/14
NO AS-BUILT CHANGES

NOTE:
THE CONTRACTOR SHALL VERIFY ALL CONTROLLING FIELD DIMENSIONS BEFORE ORDERING OR FABRICATING ANY MATERIAL.

BENCHMARK
S.P.S.N. 00586
6'x 6' CONC POST WITH DRIVE PIN LOCATED 1 MILE S.E. ALONG S.F.RR FROM RR CROSSING AT BOULDER AVE., AT SOUTH END OF ST. HWY R/W FENCE, 23.5 FT. NORTH OF NORTH RAIL OF RR, 41 FT. EAST OF BOULDER AVE., NORTHBOUND TRAFFIC LANE, 12 FT. NORTH OF CULVERT HEADWALL.
ELEV. = 1353.459'

REGISTERED PROFESSIONAL ENGINEER EDWARD NG No. 46767 Exp. 6/30/13 CIVIL STATE OF CALIFORNIA

SUBMITTED BY: DATE: 1/13/12

PLANS PREPARED BY:
AECOM
901 VIA PIEMONTE, 5TH FLOOR
ONTARIO, CA 91764

REVISIONS			
1	CCO #1		
MARK	DESCRIPTION	APPR.	DATE

CITY OF HIGHLAND

DESIGNED BY JY/NL | DRAWN BY JY/NL | CHECKED BY PL
SUBMITTED BY PAUL LAU
RECOMMENDED BY EDWARD NG 11/13/12
EDWARD NG DATE
R.C.E. 46767 EXP. 6-30-13
APPROVED BY Ernest Wong 1.14.12
ERNEST WONG, CITY ENGINEER DATE
R.C.E. 37413 EXP. 6-30-12

BOULDER AVENUE BRIDGE OVER CITY CREEK (REPLACEMENT)

CONSTRUCTION DETAILS NO. 2

DRAWER NO.

SHEET 11S OF 37

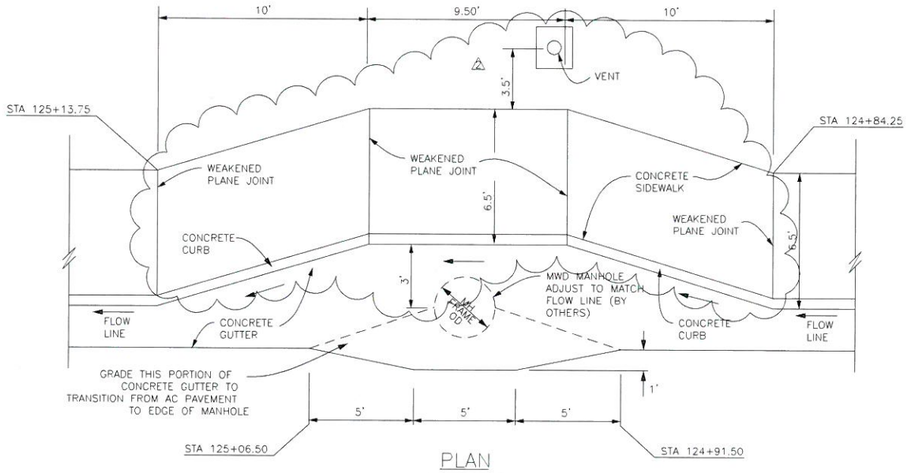

PLAN
NO SCALE

DETAIL 10
(46) CURB AND SIDEWALK AROUND MANHOLE
AT STA 124+99

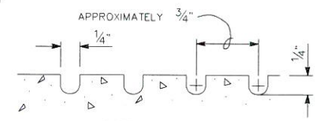

DETAIL 11-1
GROOVING
NO SCALE

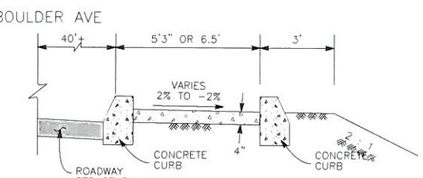

SECTION Y-Y
NO SCALE

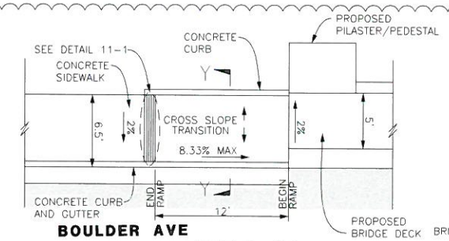

DETAIL 11
TRANSITION RAMP AND
(43) SIDEWALK AT NE BRIDGE BARRIER
NO SCALE

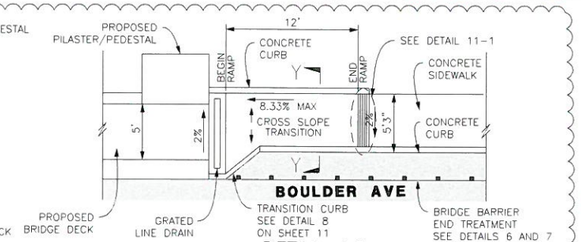

DETAIL 12
TRANSITION RAMP AND
(43) SIDEWALK AT SE BRIDGE BARRIER
NO SCALE

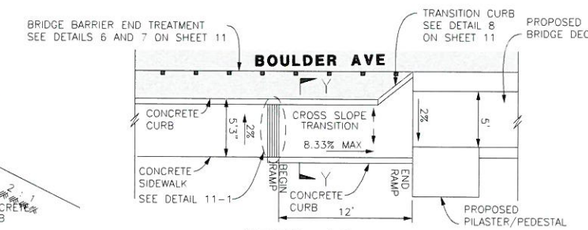

DETAIL 13
TRANSITION RAMP AND
(43) SIDEWALK AT NW BRIDGE BARRIER
NO SCALE

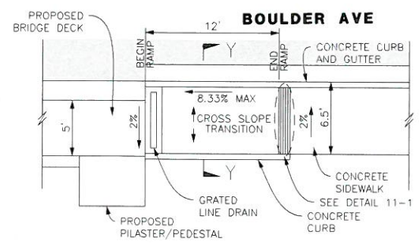

DETAIL 14
TRANSITION RAMP AND
(43) SIDEWALK AT SW BRIDGE BARRIER
NO SCALE

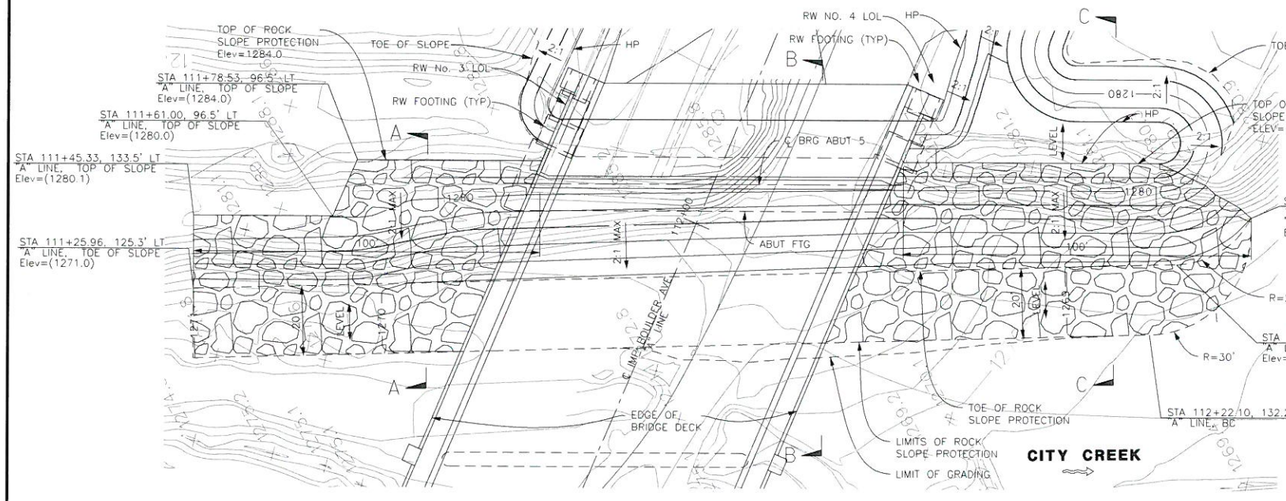

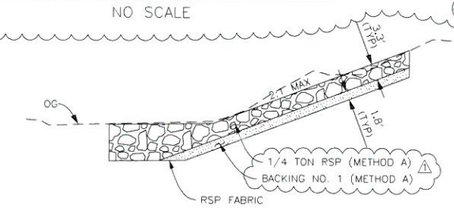

SECTION A-A
NO SCALE

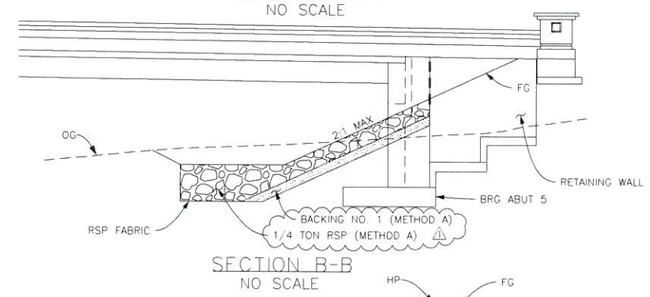

SECTION B-B
NO SCALE

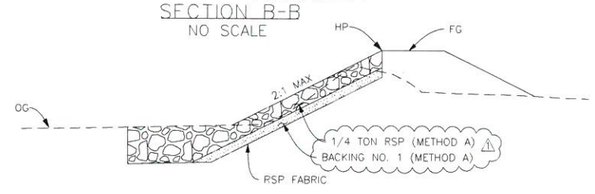

SECTION C-C
NO SCALE

REGISTERED PROFESSIONAL ENGINEER PAUL K. C. LAU No 38388 EXP. DATE 06/30/13 CIVIL STATE OF CALIFORNIA

AS-BUILT
Paul Lau 06/10/14

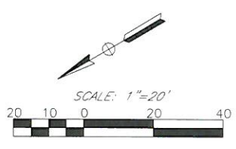

(7) ROCK SLOPE PROTECTION ALONG CITY CREEK
NO SCALE

NOTE: TOPOGRAPHIC CONTOURS ON THESE PLANS ARE BASED ON MAPPING PREPARED ON JANUARY 16, 2006. THE TOPOGRAPHIC CONTOURS ON THESE PLANS MAY NOT ACCURATELY REPRESENT THE CURRENT GROUND SURFACE AND CONTOURS IN AND ADJACENT TO CITY CREEK AND BLEDSOE CREEK DUE TO FLOODING AND CHANNEL REPAIR WORK SINCE THESE TOPOGRAPHIC MAPS WERE PREPARED. CONTRACTOR SHALL VERIFY CURRENT CHANNEL AND BANK GROUND SURFACE ELEVATIONS PRIOR TO WORK IN CHANNELS AND SHALL NOTIFY ENGINEER OF ANY CONFLICTS WITH THE PROPOSED IMPROVEMENTS.

NOTE:
THE CONTRACTOR SHALL VERIFY ALL CONTROLLING FIELD DIMENSIONS BEFORE ORDERING OR FABRICATING ANY MATERIAL.

BENCHMARK
S.P.S.N. 00586
6"x 6" CONC POST WITH DRIVE PIN LOCATED 1 MILE S.E. ALONG S.F.RR FROM RR CROSSING AT BOULDER AVE., AT SOUTH END OF ST. HWY R/W FENCE, 23.5 FT. NORTH OF NORTH RAIL OF RR, 41 FT. EAST OF BOULDER AVE., NORTHBOUND TRAFFIC LANE, 12 FT. NORTH OF CULVERT HEADWALL.
ELEV. = 1353.459'

REGISTERED PROFESSIONAL ENGINEER EDWARD NG No. 46767 Exp. 6/30/13 CIVIL STATE OF CALIFORNIA

SUBMITTED BY: DATE: 10/4/11

PLANS PREPARED BY:
AECOM
901 VIA PIEMONTE, 5TH FLOOR
ONTARIO, CA 91764

MARK	DESCRIPTION	APPR.	DATE
2	AS BUILT PLANS	PL	6/10/14
1	CCO #1		

REVISIONS

CITY OF HIGHLAND

DESIGNED BY JY/NL | DRAWN BY JY/NL | CHECKED BY PL | APPROVED BY
SUBMITTED BY PAUL LAU
RECOMMENDED BY EDWARD NG 10/04/11
EDWARD NG R.C.E. 46767 EXP. 6-30-13 DATE
ERNEST WONG, CITY ENGINEER R.C.E. 37413 EXP. 6-30-12 DATE 1.13.12

BOULDER AVENUE BRIDGE OVER CITY CREEK (REPLACEMENT)

CONSTRUCTION DETAILS NO. 3

DRAWER NO.

SHEET 12R1 OF 37

CONSTRUCTION NOTES:

(71) INSTALL TEMPORARY FENCING TYPE ESA.

(72) INSTALL TEMPORARY SILT FENCING PER CALTRANS STANDARD PLAN T51.

LEGEND

—X———X— TEMPORARY FENCING TYPE ESA

——SF—— TEMPORARY SILT FENCING

REGISTERED PROFESSIONAL ENGINEER PAUL K. C. LAU No. 38388 EXP. DATE 02/31/15 CIVIL STATE OF CALIFORNIA

AS-BUILT
Per Original Plan
Paul Lau 06/10/14
NO AS-BUILT CHANGES

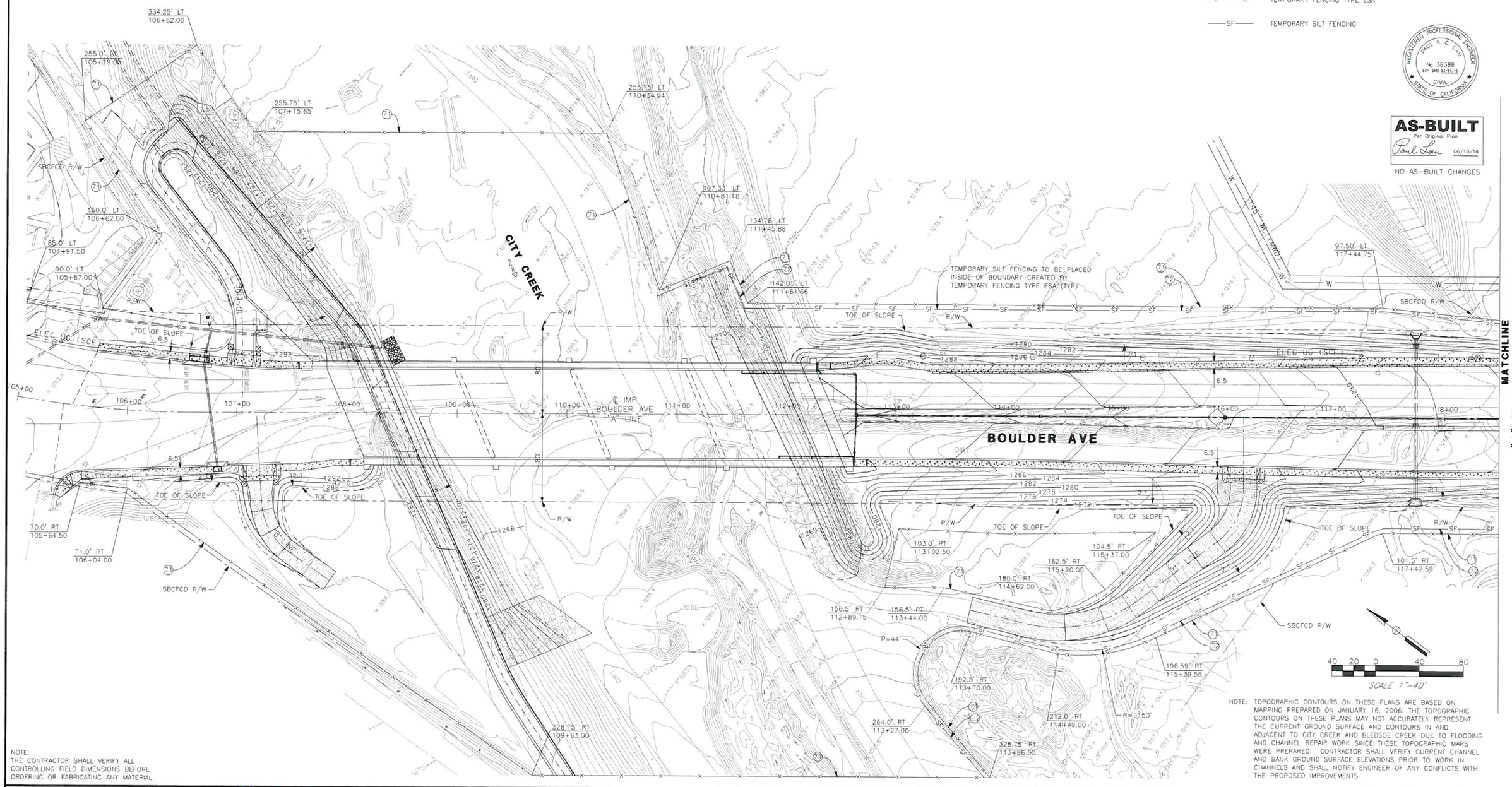

NOTE: TOPOGRAPHIC CONTOURS ON THESE PLANS ARE BASED ON MAPPING PREPARED ON JANUARY 16, 2006. THE TOPOGRAPHIC CONTOURS ON THESE PLANS MAY NOT ACCURATELY REPRESENT THE CURRENT GROUND SURFACE AND CONTOURS IN AND ADJACENT TO CITY CREEK AND BLEDSOE CREEK DUE TO FLOODING AND CHANNEL REPAIR WORK SINCE THESE TOPOGRAPHIC MAPS WERE PREPARED. CONTRACTOR SHALL VERIFY CURRENT CHANNEL AND BANK GROUND SURFACE ELEVATIONS PRIOR TO WORK IN CHANNELS AND SHALL NOTIFY ENGINEER OF ANY CONFLICTS WITH THE PROPOSED IMPROVEMENTS.

NOTE:
THE CONTRACTOR SHALL VERIFY ALL CONTROLLING FIELD DIMENSIONS BEFORE ORDERING OR FABRICATING ANY MATERIAL.

MATCHLINE "A" STA 118+50, SEE SHEET 14

BENCHMARK
S.P.S.N. 00586
6"x 6" CONC POST WITH DRIVE PIN LOCATED 1 MILE S.E. ALONG S.F.RR FROM RR CROSSING AT BOULDER AVE., AT SOUTH END OF ST. HWY R/W FENCE, 23.5 FT. NORTH OF NORTH RAIL OF RR, 41 FT. EAST OF BOULDER AVE., NORTHBOUND TRAFFIC LANE, 12 FT. NORTH OF CULVERT HEADWALL. ELEV. = 1353.459'

REGISTERED PROFESSIONAL ENGINEER EDWARD NG No. 46767 Exp. 6/30/13 CIVIL STATE OF CALIFORNIA

SUBMITTED BY: DATE: 10/4/11

PLANS PREPARED BY:
AECOM
901 VIA PIEMONTE, 5TH FLOOR
ONTARIO, CA 91764

REVISIONS

MARK	DESCRIPTION	APPR.	DATE

CITY OF HIGHLAND

DESIGNED BY	DRAWN BY	CHECKED BY
JY/NL	JY/NL	PL

SUBMITTED BY: PAUL LAU
RECOMMENDED BY: EDWARD NG 10/04/11
EDWARD NG R.C.E. 46767 EXP. 6-30-13 DATE

APPROVED BY: Ernest Wong 10.6.11
ERNEST WONG, CITY ENGINEER DATE
R.C.E. 37413 EXP. 6-30-12

BOULDER AVENUE BRIDGE OVER CITY CREEK (REPLACEMENT)

GRADING PLAN
BOULDER AVE
STA 105+00 TO 118+50

DRAWER NO.

SHEET 13 OF 37

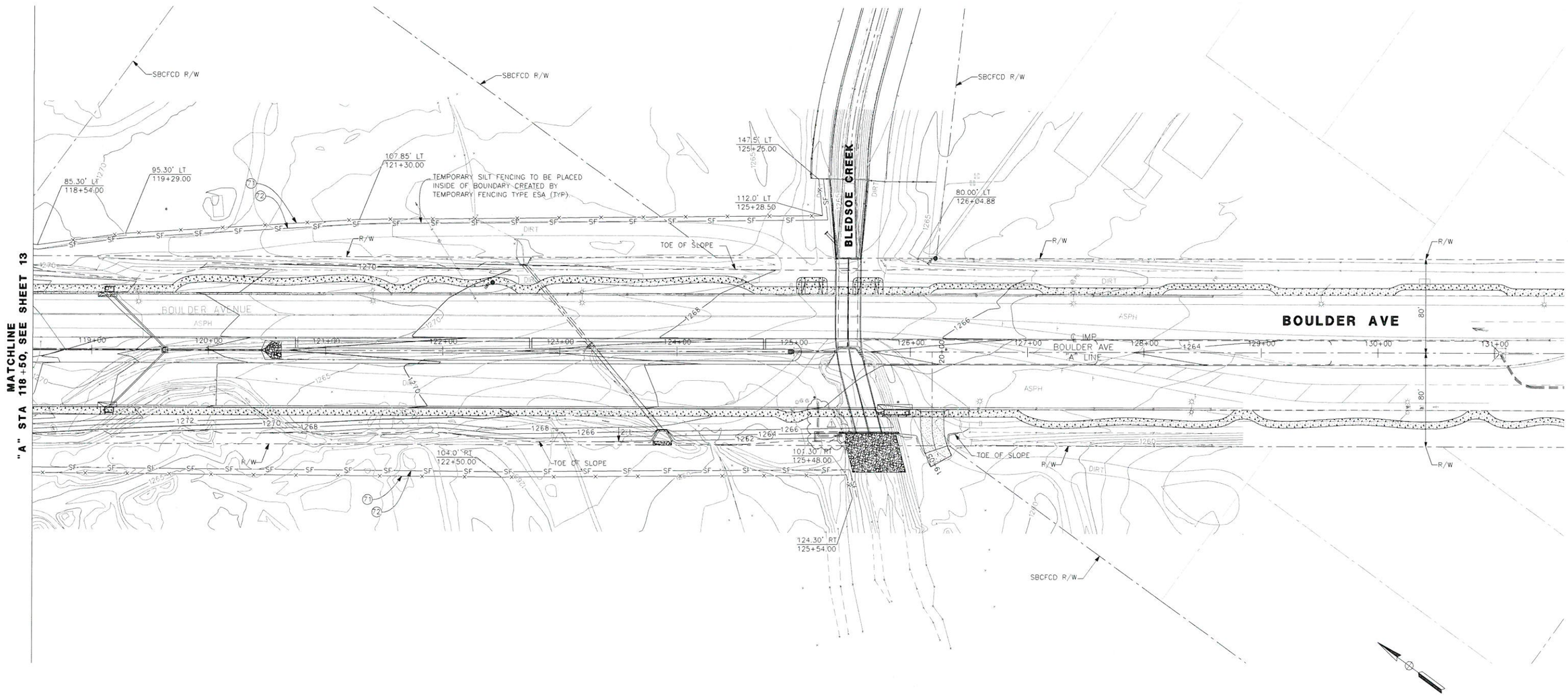

40 20 0 40 80

SCALE 1"=40'

CONSTRUCTION NOTES:

(71) INSTALL TEMPORARY FENCING TYPE ESA.

(72) INSTALL TEMPORARY SILT FENCING PER CALTRANS STANDARD PLAN T51.

LEGEND

—X———X— TEMPORARY FENCING TYPE ESA

——SF—— TEMPORARY SILT FENCING

REGISTERED PROFESSIONAL ENGINEER
PAUL K. C. LAU
No 38388
EXP. DATE 03/31/15
CIVIL
STATE OF CALIFORNIA

AS-BUILT
Paul Lau 06/10/14
NO AS-BUILT CHANGES

NOTE: TOPOGRAPHIC CONTOURS ON THESE PLANS ARE BASED ON MAPPING PREPARED ON JANUARY 16, 2006. THE TOPOGRAPHIC CONTOURS ON THESE PLANS MAY NOT ACCURATELY REPRESENT THE CURRENT GROUND SURFACE AND CONTOURS IN AND ADJACENT TO CITY CREEK AND BLEDSOE CREEK DUE TO FLOODING AND CHANNEL REPAIR WORK SINCE THESE TOPOGRAPHIC MAPS WERE PREPARED. CONTRACTOR SHALL VERIFY CURRENT CHANNEL AND BANK GROUND SURFACE ELEVATIONS PRIOR TO WORK IN CHANNELS AND SHALL NOTIFY ENGINEER OF ANY CONFLICTS WITH THE PROPOSED IMPROVEMENTS.

NOTE:
THE CONTRACTOR SHALL VERIFY ALL CONTROLLING FIELD DIMENSIONS BEFORE ORDERING OR FABRICATING ANY MATERIAL.

BENCHMARK
S.P.S.N. 00586
6"x 6" CONC POST WITH DRIVE PIN LOCATED 1 MILE S.E. ALONG S.F.RR FROM RR CROSSING AT BOULDER AVE., AT SOUTH END OF ST. HWY R/W FENCE, 23.5 FT. NORTH OF NORTH RAIL OF RR, 41 FT. EAST OF BOULDER AVE., NORTHBOUND TRAFFIC LANE, 12 FT. NORTH OF CULVERT HEADWALL.
ELEV. = 1353.459'

REGISTERED PROFESSIONAL ENGINEER
EDWARD NG
No. 46767
Exp. 6/30/13
CIVIL
STATE OF CALIFORNIA

SUBMITTED BY: DATE: 10/4/11

PLANS PREPARED BY:
AECOM
901 VIA PIEMONTE, 5TH FLOOR
ONTARIO, CA 91764

REVISIONS

MARK	DESCRIPTION	APPR.	DATE
1	CCO #1		

CITY OF HIGHLAND

DESIGNED BY	DRAWN BY	CHECKED BY
JY/NL	JY/NL	PL

SUBMITTED BY
PAUL LAU

RECOMMENDED BY
EDWARD NG 10/04/11
EDWARD NG DATE
R.C.E. 46767 EXP. 6-30-13

APPROVED BY
Ernest Wong 1.13.12
ERNEST WONG, CITY ENGINEER DATE
R.C.E. 37413 EXP. 6-30-12

BOULDER AVENUE BRIDGE OVER CITY CREEK (REPLACEMENT)

GRADING PLAN
BOULDER AVE
STA 118+50 TO 131+50

DRAWER NO.

SHEET 14R1 OF 37

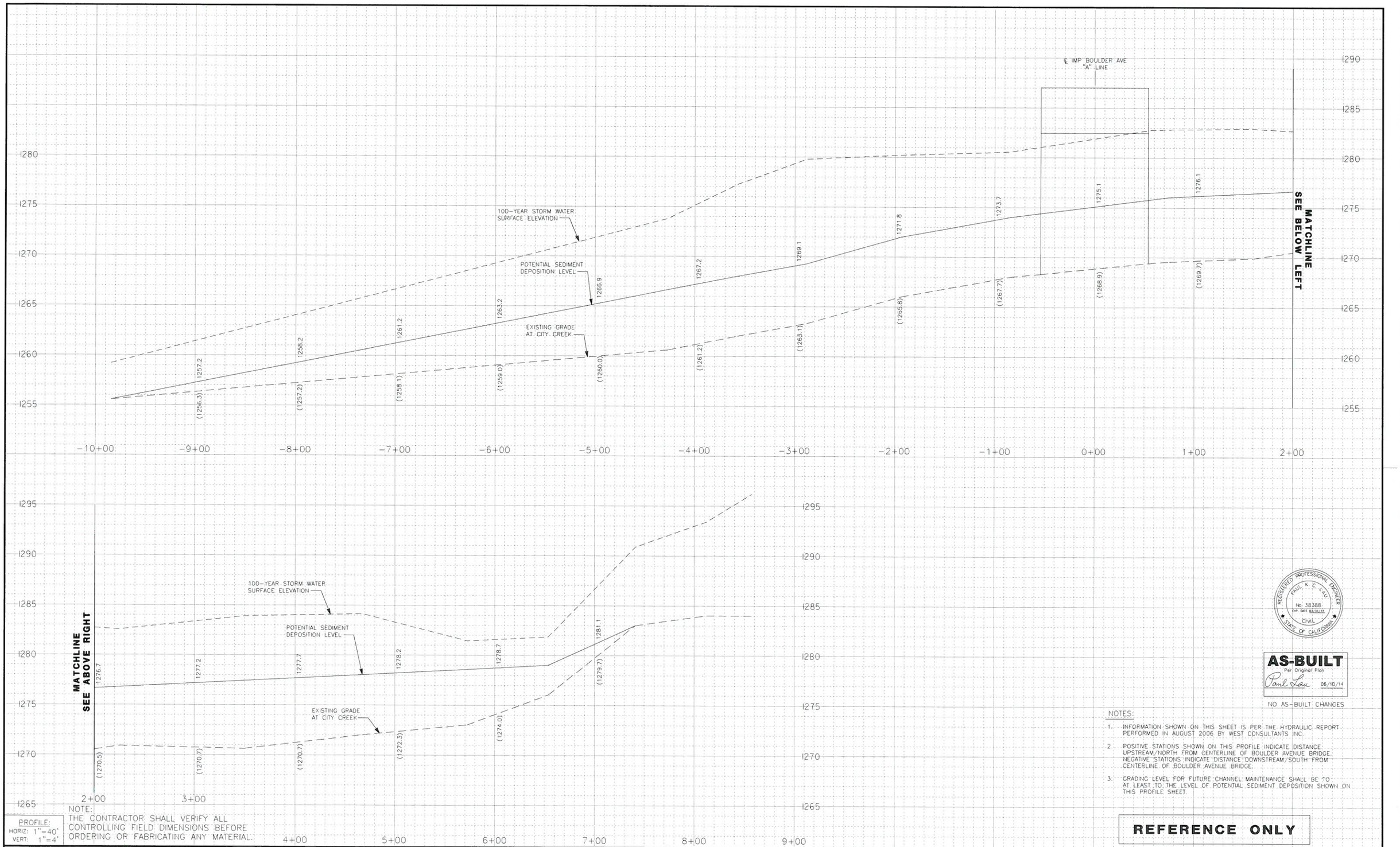

PROFILE:
HORIZ: 1"=40'
VERT: 1"=4'

NOTE:
THE CONTRACTOR SHALL VERIFY ALL CONTROLLING FIELD DIMENSIONS BEFORE ORDERING OR FABRICATING ANY MATERIAL.

REGISTERED PROFESSIONAL ENGINEER
PAUL K. C. LAU
No. 38388
EXP. DATE 03/31/15
CIVIL
STATE OF CALIFORNIA

AS-BUILT
Per Original Plan
Paul Lau 06/10/14

NO AS-BUILT CHANGES

NOTES:

1. INFORMATION SHOWN ON THIS SHEET IS PER THE HYDRAULIC REPORT PERFORMED IN AUGUST 2006 BY WEST CONSULTANTS INC.
2. POSITIVE STATIONS SHOWN ON THIS PROFILE INDICATE DISTANCE UPSTREAM/NORTH FROM CENTERLINE OF BOULDER AVENUE BRIDGE. NEGATIVE STATIONS INDICATE DISTANCE DOWNSTREAM/SOUTH FROM CENTERLINE OF BOULDER AVENUE BRIDGE.
3. GRADING LEVEL FOR FUTURE CHANNEL MAINTENANCE SHALL BE TO AT LEAST TO THE LEVEL OF POTENTIAL SEDIMENT DEPOSITION SHOWN ON THIS PROFILE SHEET.

REFERENCE ONLY

BENCHMARK
S.P.S.N. 00586
6'x 6' CONC POST WITH DRIVE PIN LOCATED 1 MILE S.E. ALONG S.F.RR FROM RR CROSSING AT BOULDER AVE., AT SOUTH END OF ST. HWY R/W FENCE, 23.5 FT. NORTH OF NORTH RAIL OF RR, 41 FT. EAST OF BOULDER AVE., NORTHBOUND TRAFFIC LANE, 12 FT. NORTH OF CULVERT HEADWALL.
ELEV. = 1353.459'

REGISTERED PROFESSIONAL ENGINEER
EDWARD NG
No. 46767
Exp. 6/30/13
CIVIL
STATE OF CALIFORNIA

SUBMITTED BY: DATE: 10/4/11

PLANS PREPARED BY:
AECOM
901 VIA PIEMONTE, 5TH FLOOR
ONTARIO, CA 91764

REVISIONS

MARK	DESCRIPTION	APPR.	DATE

CITY OF HIGHLAND

DESIGNED BY JY/NL | DRAWN BY JY/NL | CHECKED BY PL
SUBMITTED BY PAUL LAU
RECOMMENDED BY EDWARD NG 10/4/11
EDWARD NG R.C.E. 46767 EXP. 6-30-13 DATE
APPROVED BY Ernest Wong 10.6.11
ERNEST WONG, CITY ENGINEER R.C.E. 37413 EXP. 6-30-12 DATE

BOULDER AVENUE BRIDGE OVER CITY CREEK (REPLACEMENT)

CHANNEL MAINTENANCE PLAN CITY CREEK

DRAWER NO.

SHEET 15 OF 37

NOTE: PROVIDE MINIMUM 1.5" CONCRETE COVER OVER REINFORCEMENT ON INSIDE FACE OF REINFORCED CONCRETE PIPE AND fc'=5000 PSI WHEN VELOCITY EXCEEDS 20 FPS.

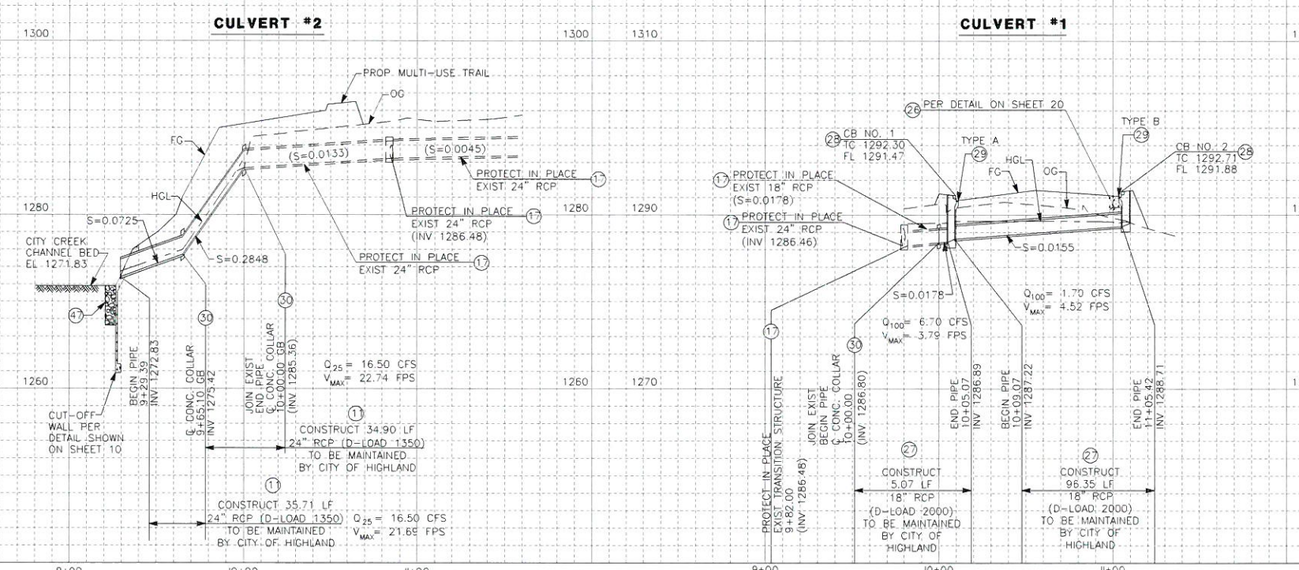

PROFILE:
HORIZ: 1"=40'
VERT: 1"=8'

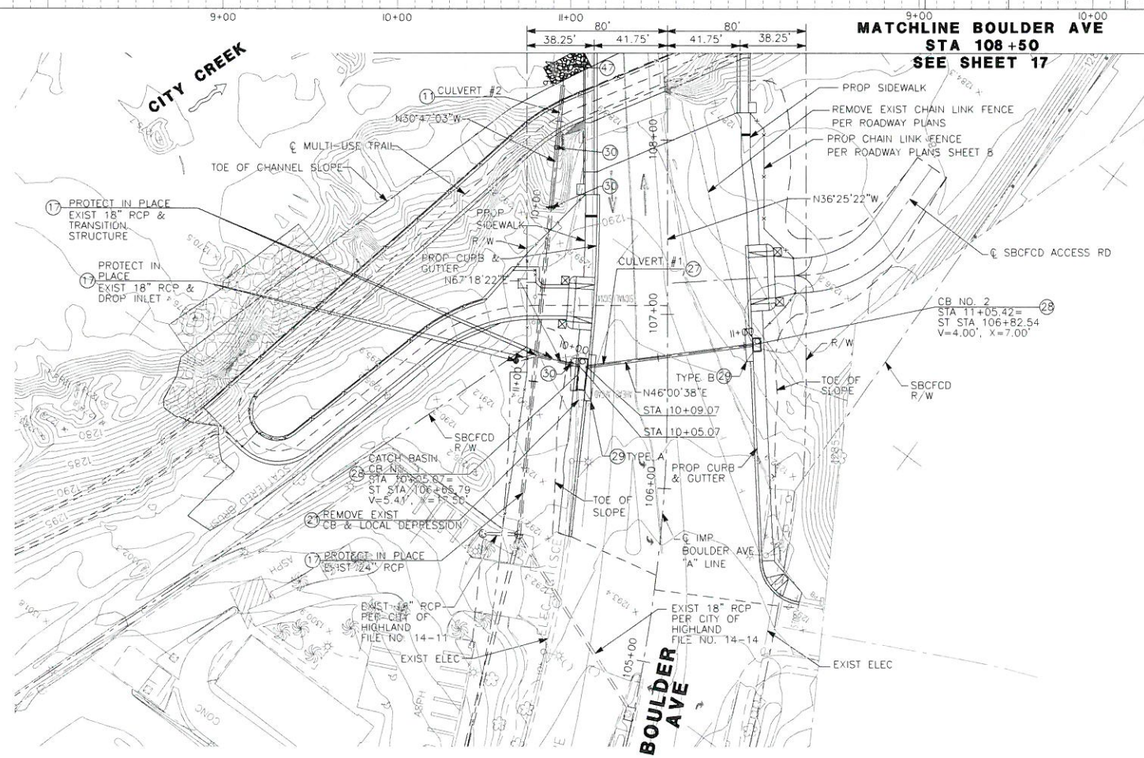

CONSTRUCTION NOTES

(11) CONSTRUCT 24" RCP (D-LOAD PER PROFILE).
(17) PROTECT IN PLACE EXISTING FACILITY.
(21) REMOVE EXISTING.
(26) CONSTRUCT FULL DEPTH SLURRY CEMENT BACKFILL PER DETAIL ON SHEET 20.
(27) CONSTRUCT 18" RCP (D-LOAD PER PROFILE).
(28) CONSTRUCT TYPE "A" CATCH BASIN PER SAN BERNARDINO COUNTY TRANSPORTATION DEPARTMENT STANDARD PLAN NO. 206.
(29) CONSTRUCT LOCAL DEPRESSION PER SAN BERNARDINO COUNTY ROAD DEPARTMENT STANDARD PLAN NO. 203 A, TYPE PER PLAN.
(30) CONSTRUCT CONCRETE COLLAR PER SPPWC STANDARD PLAN 380-4.
(47) CONSTRUCT ROCK SLOPE PROTECTION PER DETAIL ON SHEET 21.

REGISTERED PROFESSIONAL ENGINEER PAUL K. C. LAU No 38388 EXP. DATE 03/31/15 CIVIL STATE OF CALIFORNIA

AS-BUILT
Per Original Plan
Paul Lau 06/10/14
NO AS-BUILT CHANGES

40 20 0 40 80
SCALE 1"=40'

NOTE:
THE CONTRACTOR SHALL VERIFY ALL CONTROLLING FIELD DIMENSIONS BEFORE ORDERING OR FABRICATING ANY MATERIAL.

BENCHMARK
S.P.S.N. 00586
6"x 6" CONC POST WITH DRIVE PIN LOCATED 1 MILE S.E. ALONG S.F.RR FROM RR CROSSING AT BOULDER AVE., AT SOUTH END OF ST. HWY R/W FENCE, 23.5 FT. NORTH OF NORTH RAIL OF RR, 41 FT. EAST OF BOULDER AVE., NORTHBOUND TRAFFIC LANE, 12 FT. NORTH OF CULVERT HEADWALL.
ELEV. = 1353.459'

REGISTERED PROFESSIONAL ENGINEER EDWARD NG No. 46767 Exp. 6/30/13 CIVIL STATE OF CALIFORNIA

SUBMITTED BY: DATE: 10/4/11

PLANS PREPARED BY:
AECOM
901 VIA PIEMONTE, 5TH FLOOR
ONTARIO, CA 91764

REVISIONS

MARK	DESCRIPTION	APPR.	DATE

CITY OF HIGHLAND

DESIGNED BY	DRAWN BY	CHECKED BY
JY/NL	JY/NL	PL

SUBMITTED BY PAUL LAU
RECOMMENDED BY EDWARD NG 10/04/11
EDWARD NG R.C.E. 46767 EXP. 6-30-13 DATE
APPROVED BY Ernest Wong 10.6.11
ERNEST WONG, CITY ENGINEER R.C.E. 37413 EXP. 6-30-12 DATE

BOULDER AVENUE BRIDGE OVER CITY CREEK (REPLACEMENT)

STORM DRAIN PLAN AND PROFILE CULVERT #1 & CULVERT #2

DRAWER NO.

SHEET 16 OF 37

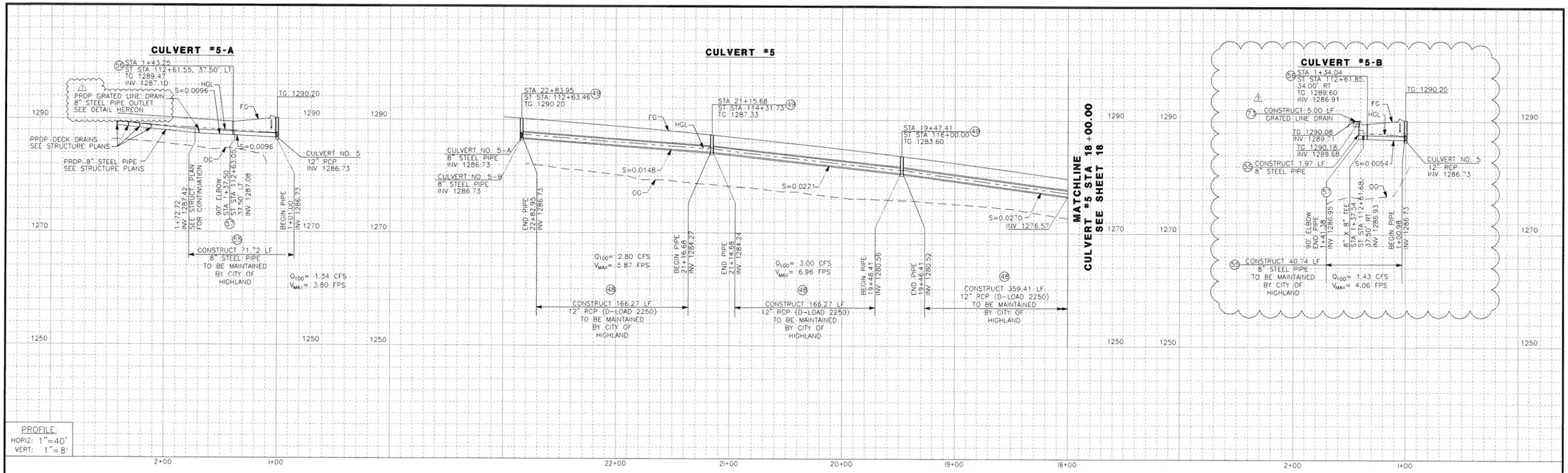

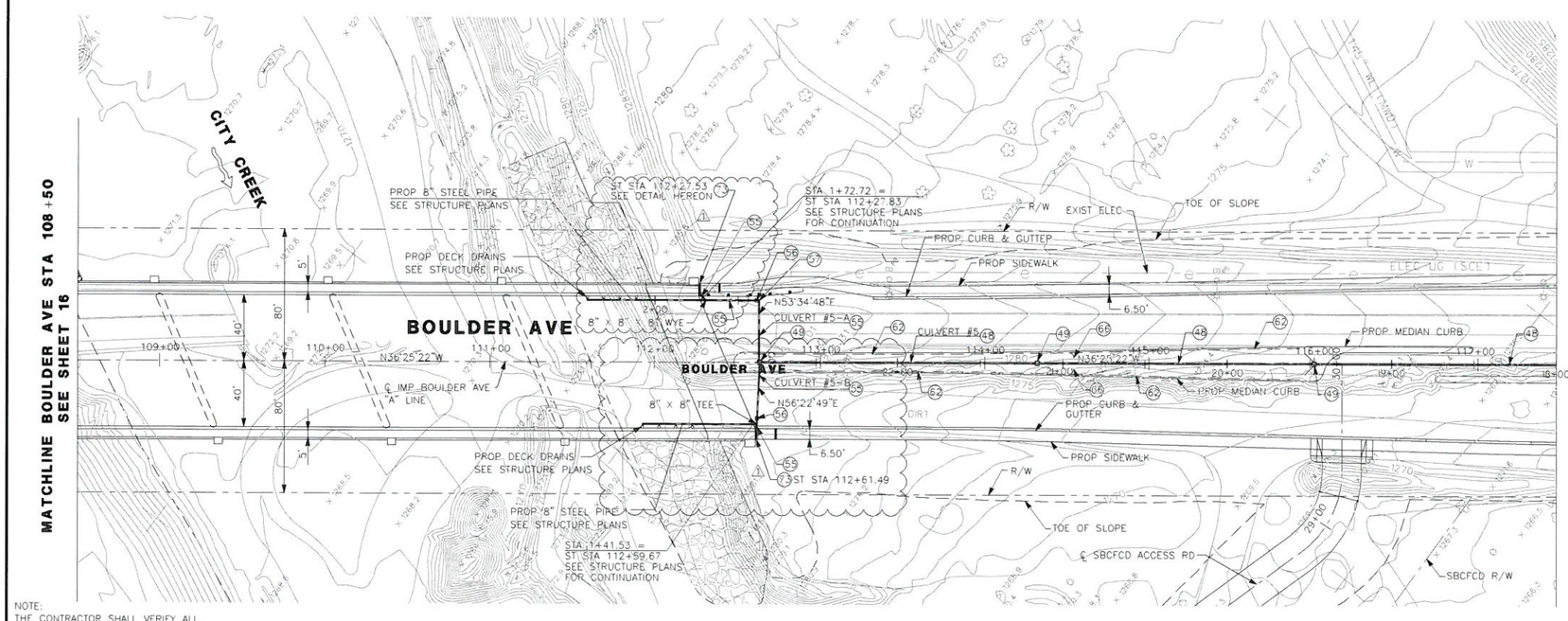

NOTE:
THE CONTRACTOR SHALL VERIFY ALL CONTROLLING FIELD DIMENSIONS BEFORE ORDERING OR FABRICATING ANY MATERIAL.

40 20 0 40 80
SCALE 1"=40'

REGISTERED PROFESSIONAL ENGINEER
PAUL K. C. LAU
No. 38388
EXP. DATE 03/31/13
CIVIL
STATE OF CALIFORNIA

CONSTRUCTION NOTES

- (48) CONSTRUCT 12" RCP (D-LOAD PER PROFILE).
- (49) INSTALL 2' X' 2' PRECAST CB W/CAST IRON FRAME AND GRATE PER DETAIL ON SHEET 25.
- (55) CONSTRUCT 8" STEEL PIPE.
- (56) CONSTRUCT CLEANOUT PER DETAIL ON SHEET 25, TYPE PER PLAN.
- (57) CONSTRUCT 8" – 90° ELBOW
- (62) CONSTRUCT MEDIAN EDGE DRAIN PER DETAIL ON SHEET 25.
- (66) CONSTRUCT EDGE DRAIN CLEANOUT AT 200' O.C. PER CALTRANS 2006 STANDARD PLAN NO. D99C.
- (73) ⚠ CONSTRUCT GRATED LINE DRAIN WITH BOTTOM OUTLET PLATE & HEEL RESISTANT GRATE PER CALTRANS 2006 STANDARD PLAN NO. D98C.

AS-BUILT
Paul Lau 06/10/14
NO AS-BUILT CHANGES

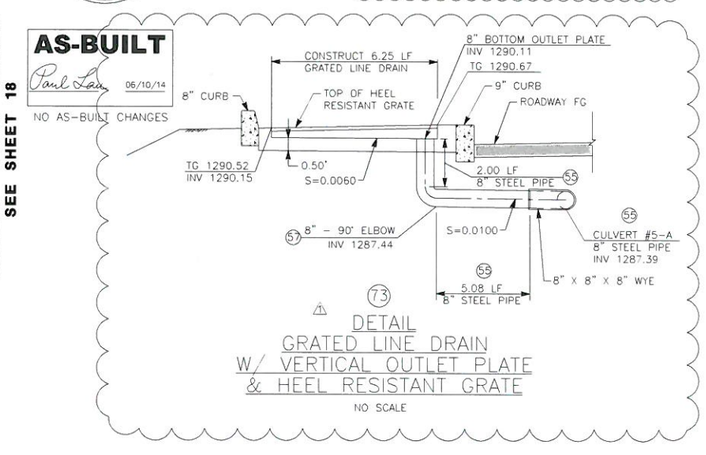

⚠ DETAIL
GRATED LINE DRAIN
W/ VERTICAL OUTLET PLATE
& HEEL RESISTANT GRATE
NO SCALE

BENCHMARK
S.P.S.N. 00586
6'x 6' CONC POST WITH DRIVE PIN LOCATED 1 MILE S.E. ALONG S.F.RR FROM RR CROSSING AT BOULDER AVE., AT SOUTH END OF ST. HWY R/W FENCE, 23.5 FT. NORTH OF NORTH RAIL OF RR; 41 FT. EAST OF BOULDER AVE., NORTHBOUND TRAFFIC LANE, 12 FT. NORTH OF CULVERT HEADWALL.
ELEV. = 1353.459'

REGISTERED PROFESSIONAL ENGINEER
EDWARD NG
No. 46767
Exp. 6/30/13
CIVIL
STATE OF CALIFORNIA

SUBMITTED BY:
DATE: 10/4/11

PLANS PREPARED BY:
AECOM
901 VIA PIEMONTE, 5TH FLOOR
ONTARIO, CA 91764

REVISIONS

MARK	DESCRIPTION	APPR.	DATE
⚠	CCO #1		

CITY OF HIGHLAND

DESIGNED BY	DRAWN BY	CHECKED BY
JY/NL	JY/NL	PL

SUBMITTED BY: PAUL LAU
RECOMMENDED BY: EDWARD NG 10/04/11
EDWARD NG DATE
R.C.E. 46767 EXP. 6-30-13

APPROVED BY: Ernest Wong 1.13.12
ERNEST WONG, CITY ENGINEER DATE
R.C.E. 37413 EXP. 6-30-12

BOULDER AVENUE BRIDGE OVER CITY CREEK (REPLACEMENT)

STORM DRAIN PLAN AND PROFILE CULVERT #5 & CULVERT #5-A & CULVERT #5-B

DRAWER NO.

SHEET 17R1 OF 37

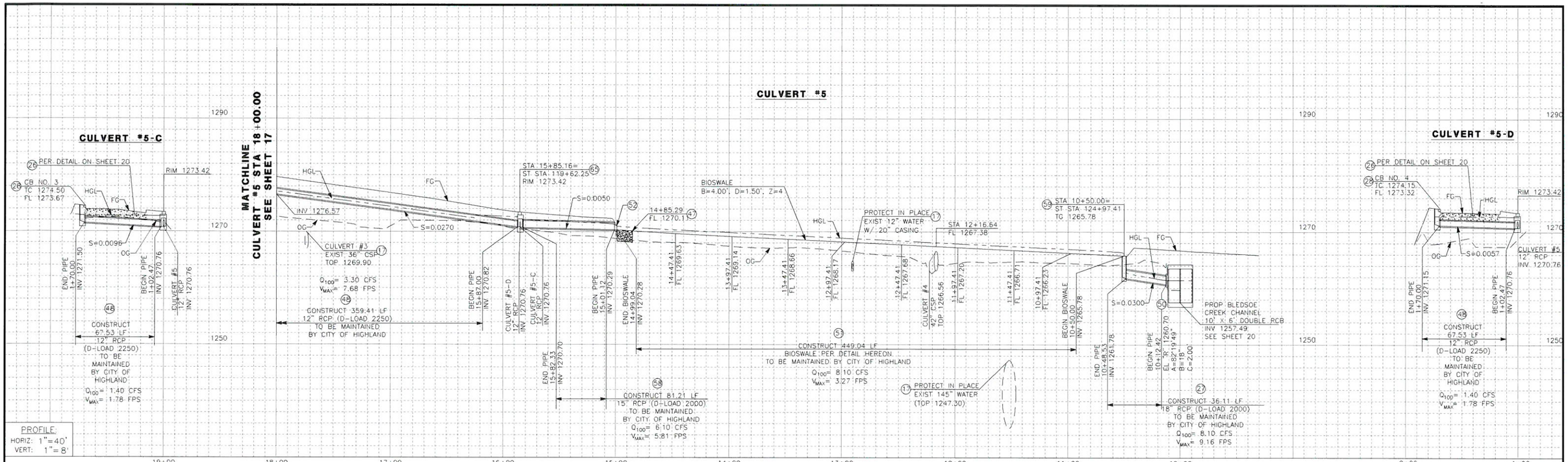

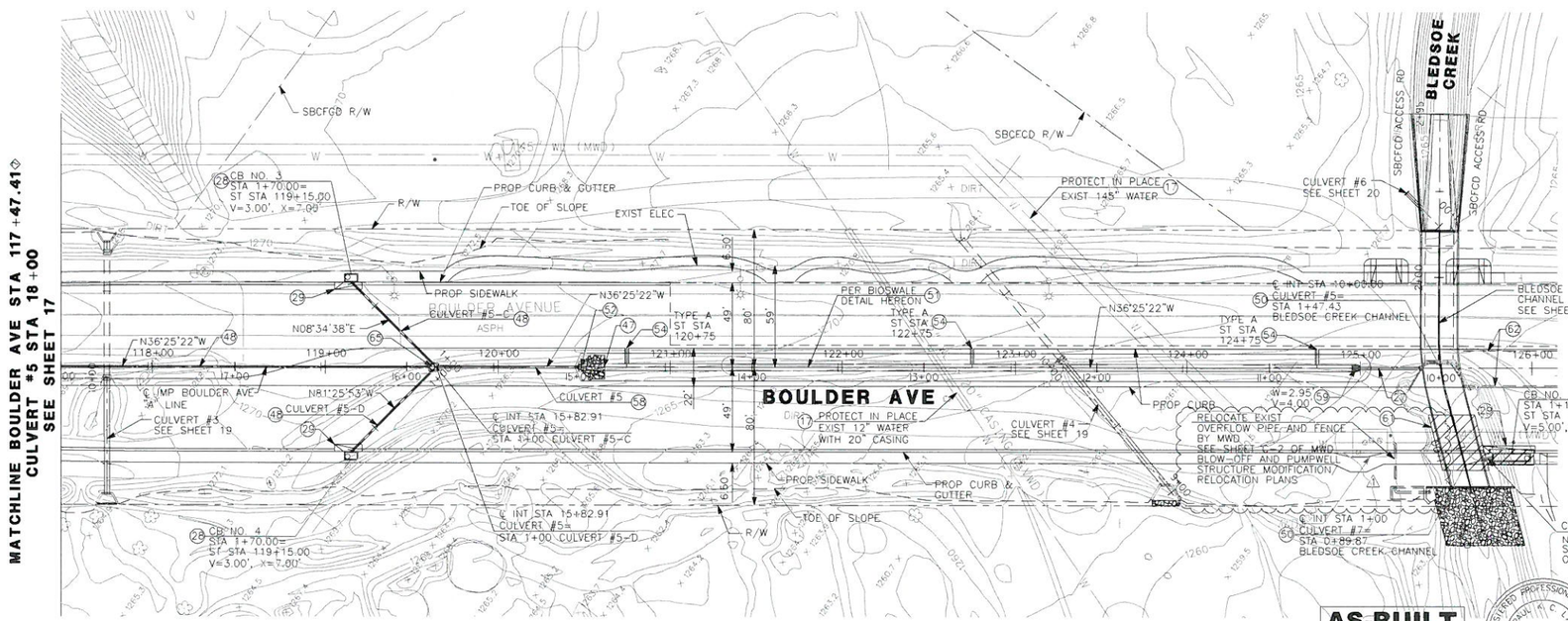

CONSTRUCTION NOTES

- (17) PROTECT IN PLACE EXISTING FACILITY.
- (26) CONSTRUCT FULL DEPTH SLURRY CEMENT BACKFILL PER DETAIL ON SHEET 20.
- (27) CONSTRUCT 18" RCP (D-LOAD PER PROFILE).
- (28) CONSTRUCT TYPE "A" CATCH BASIN PER SAN BERNARDINO COUNTY TRANSPORTATION DEPARTMENT STANDARD PLAN NO. 206.
- (29) CONSTRUCT LOCAL DEPRESSION PER SAN BERNARDINO COUNTY ROAD DEPARTMENT STANDARD PLAN NO. 203 A, TYPE PER PLAN.
- (47) CONSTRUCT ROCK SLOPE PROTECTION PER DETAIL ON SHEET 21.
- (48) CONSTRUCT 12" RCP (D-LOAD PER PROFILE).
- (50) CONSTRUCT JUNCTION STRUCTURE PER SPPWC STANDARD PLAN 333-2.
- (51) CONSTRUCT BIOSWALE PER DETAIL.
- (52) CONSTRUCT CONCRETE FLARED END SECTION TYPE A PER CALTRANS STANDARD PLAN D94B.
- (54) CONSTRUCT MEDIAN CURB OPENING PER DETAIL ON SHEET 25, TYPE PER PLAN.
- (58) CONSTRUCT 15" RCP (D-LOAD PER PROFILE).
- (59) CONSTRUCT GRATING CATCH BASIN-ALLEY (LONGITUDINAL) PER SPPWC STD PLAN 304-3.
- (61) CONSTRUCT LIQUID BOOT IMPERMEABLE LINER PER DETAIL ON SHEET 22, OR APPROVED EQUAL.
- (62) CONSTRUCT MEDIAN EDGE DRAIN PER DETAIL ON SHEET 25.
- (65) CONSTRUCT MANHOLE STRUCTURE PER SPPWC STD PLAN 321-2.

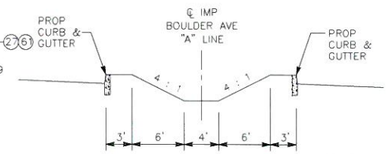

(51) DETAIL – BIOSWALE

SCALE:
HORIZ: 1" = 8'
VERT: 1" = 4'

40 20 0 40 80
SCALE 1"=40'

NOTE:
THE CONTRACTOR SHALL VERIFY ALL CONTROLLING FIELD DIMENSIONS BEFORE ORDERING OR FABRICATING ANY MATERIAL.

AS-BUILT
Paul Lau 06/10/14
NO AS-BUILT CHANGES

REGISTERED PROFESSIONAL ENGINEER
PAUL K. C. LAU
No. 38388
EXP. DATE 03/31/15
CIVIL
STATE OF CALIFORNIA

BENCHMARK
S.P.S.N. 00586
6"x 6" CONC POST WITH DRIVE PIN LOCATED 1 MILE S.E. ALONG S.F.RR FROM RR CROSSING AT BOULDER AVE., AT SOUTH END OF ST. HWY R/W FENCE, 23.5 FT. NORTH OF NORTH RAIL OF RR, 41 FT. EAST OF BOULDER AVE., NORTHBOUND TRAFFIC LANE, 12 FT. NORTH OF CULVERT HEADWALL.
ELEV. = 1353.459'

REGISTERED PROFESSIONAL ENGINEER
EDWARD NG
No. 46767
Exp. 6/30/13
CIVIL
STATE OF CALIFORNIA

SUBMITTED BY:
DATE: 10/4/11

PLANS PREPARED BY:
AECOM
901 VIA PIEMONTE, 5TH FLOOR
ONTARIO, CA 91764

REVISIONS

MARK	DESCRIPTION	APPR.	DATE
1	CCO #1		

CITY OF HIGHLAND

DESIGNED BY	DRAWN BY	CHECKED BY
JY/NL	JY/NL	PL

SUBMITTED BY
PAUL LAU

RECOMMENDED BY
EDWARD NG 10/04/11
EDWARD NG DATE
R.C.E. 46767 EXP. 6-30-13

APPROVED BY
1.13.12
ERNEST WONG, CITY ENGINEER DATE
R.C.E. 37413 EXP. 6-30-12

BOULDER AVENUE BRIDGE
OVER CITY CREEK (REPLACEMENT)

STORM DRAIN
PLAN AND PROFILE
CULVERT #5, CULVERT #5-C
CULVERT #5-D &
CULVERT #7

DRAWER NO.

SHEET 18R1 OF 37

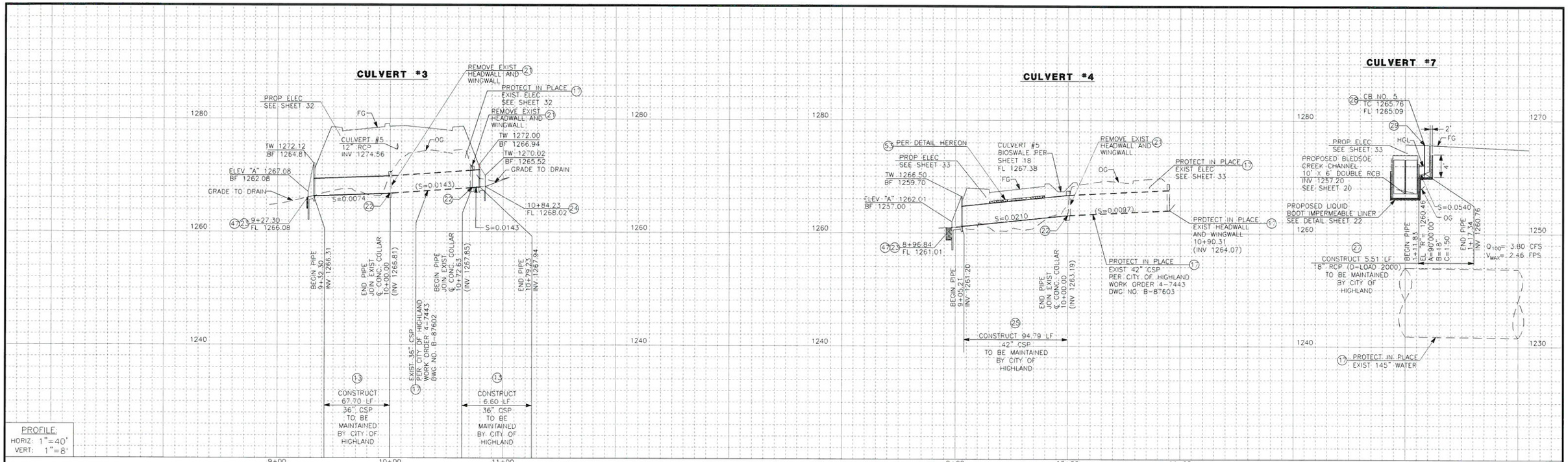

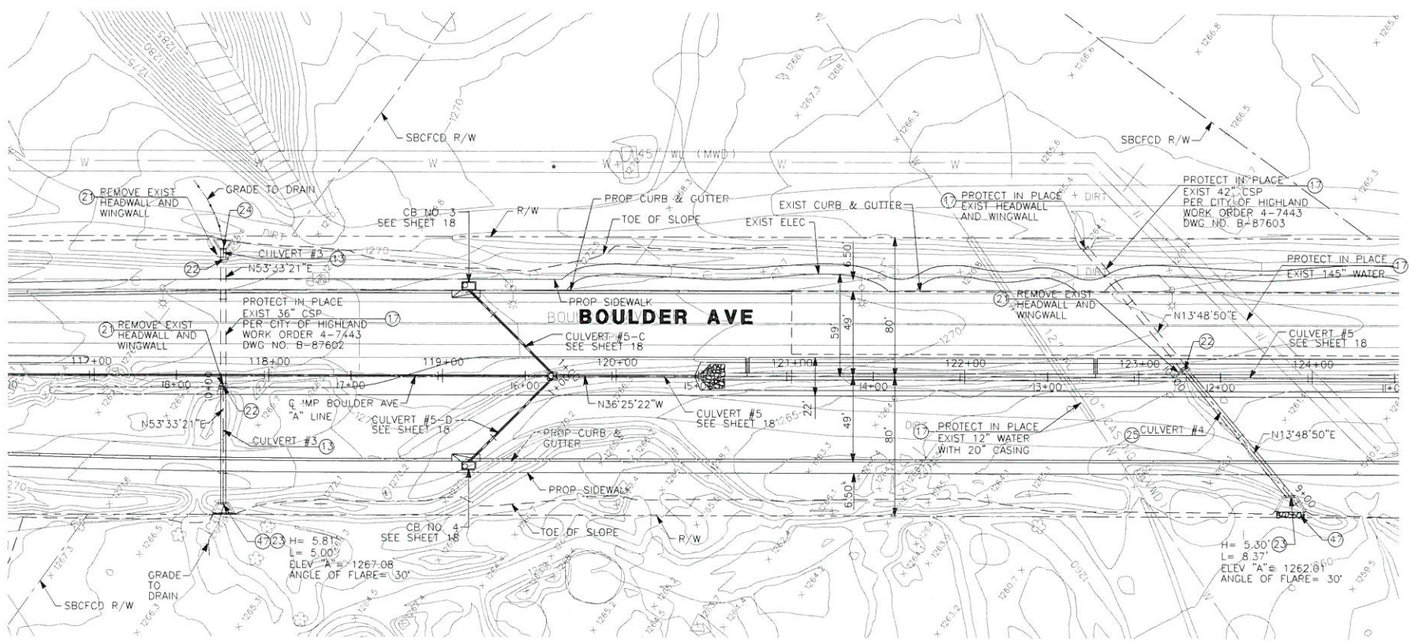

CONSTRUCTION NOTES

(13) CONSTRUCT 36" CSP.

(17) PROTECT IN PLACE EXISTING FACILITY.

(21) REMOVE EXISTING.

(22) CONSTRUCT CONCRETE COLLAR PER DETAIL SHOWN ON SHEET 21.

(23) CONSTRUCT PIPE CULVERT HEADWALL AND WINGWALL STRUCTURE PER CALTRANS STANDARD PLAN D86B.

(24) CONSTRUCT HEADWALL WING-TYPE PER SAN BERNARDINO COUNTY ROAD DEPARTMENT STANDARD PLAN NO. 209.

(25) CONSTRUCT 42" CSP.

(27) CONSTRUCT 18" RCP (D-LOAD PER PROFILE).

(28) CONSTRUCT TYPE "A" CATCH BASIN PER SAN BERNARDINO COUNTY TRANSPORTATION DEPARTMENT STANDARD PLAN NO. 206.

(29) CONSTRUCT LOCAL DEPRESSION PER SAN BERNARDINO COUNTY ROAD DEPARTMENT STANDARD PLAN NO. 203 A, TYPE PER PLAN.

(47) CONSTRUCT ROCK SLOPE PROTECTION PER DETAIL ON SHEET 21.

(53) CONSTRUCT 4" THICK SLURRY CEMENT BACKFILL.

REGISTERED PROFESSIONAL ENGINEER PAUL K. C. LAU No. 38388 EXP. DATE 06/30/13 CIVIL STATE OF CALIFORNIA

AS-BUILT
Per Original Plan
Paul Lau 06/10/14
NO AS-BUILT CHANGES

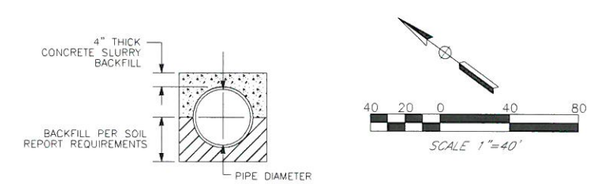

(53) DETAIL – 4" THICK SLURRY CEMENT BACKFILL
NO SCALE

NOTE:
THE CONTRACTOR SHALL VERIFY ALL CONTROLLING FIELD DIMENSIONS BEFORE ORDERING OR FABRICATING ANY MATERIAL.

BENCHMARK
S.P.S.N. 00586
6"x 6" CONC POST WITH DRIVE PIN LOCATED 1 MILE S.E. ALONG S.F.RR FROM RR CROSSING AT BOULDER AVE., AT SOUTH END OF ST. HWY R/W FENCE, 23.5 FT. NORTH OF NORTH RAIL OF RR, 41 FT. EAST OF BOULDER AVE., NORTHBOUND TRAFFIC LANE, 12 FT. NORTH OF CULVERT HEADWALL.
ELEV. = 1353.459'

REGISTERED PROFESSIONAL ENGINEER EDWARD NG No. 46767 Exp. 6/30/13 CIVIL STATE OF CALIFORNIA

SUBMITTED BY: DATE: 10/4/11

PLANS PREPARED BY:
AECOM
901 VIA PIEMONTE, 5TH FLOOR
ONTARIO, CA 91764

REVISIONS

MARK	DESCRIPTION	APPR.	DATE

CITY OF HIGHLAND

DESIGNED BY JY/NL | DRAWN BY JY/NL | CHECKED BY PL
SUBMITTED BY PAUL LAU
RECOMMENDED BY EDWARD NG 10/04/11
EDWARD NG DATE
R.C.E. 46767 EXP. 6-30-13

APPROVED BY
10.6.11
ERNEST WONG, CITY ENGINEER DATE
R.C.E. 37413 EXP. 6-30-12

BOULDER AVENUE BRIDGE OVER CITY CREEK (REPLACEMENT)

STORM DRAIN PLAN AND PROFILE CULVERT #3 & CULVERT #4

DRAWER NO.

SHEET 19 OF 37

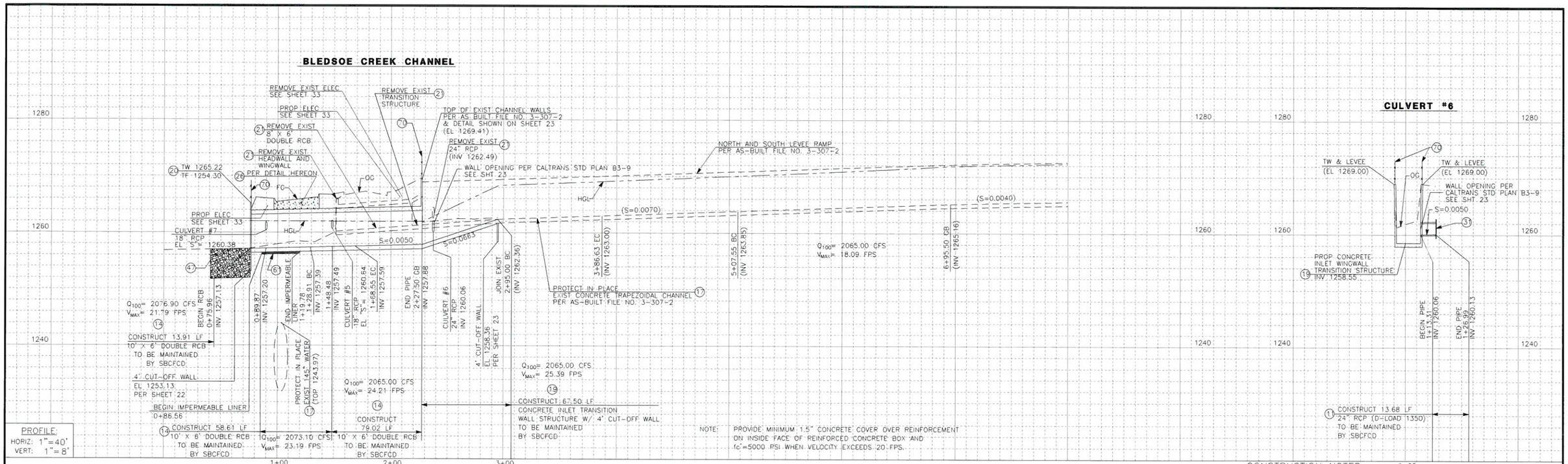

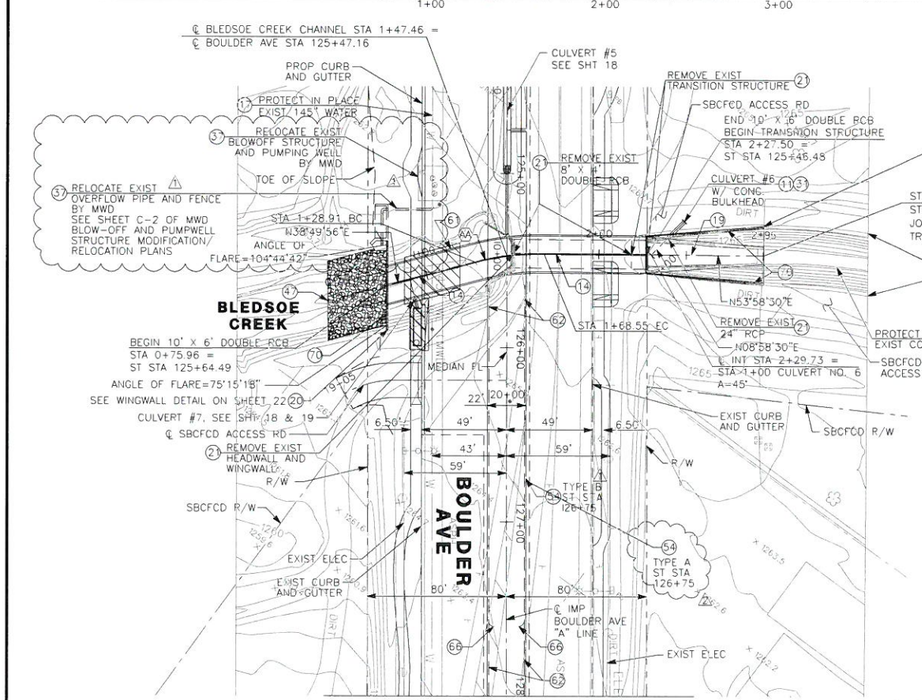

NOTE:
THE CONTRACTOR SHALL VERIFY ALL CONTROLLING FIELD DIMENSIONS BEFORE ORDERING OR FABRICATING ANY MATERIAL.

CURVE DATA

No.	R	Δ	T	L
AA	150.00'	N74°51'26"E	19.94'	39.64'

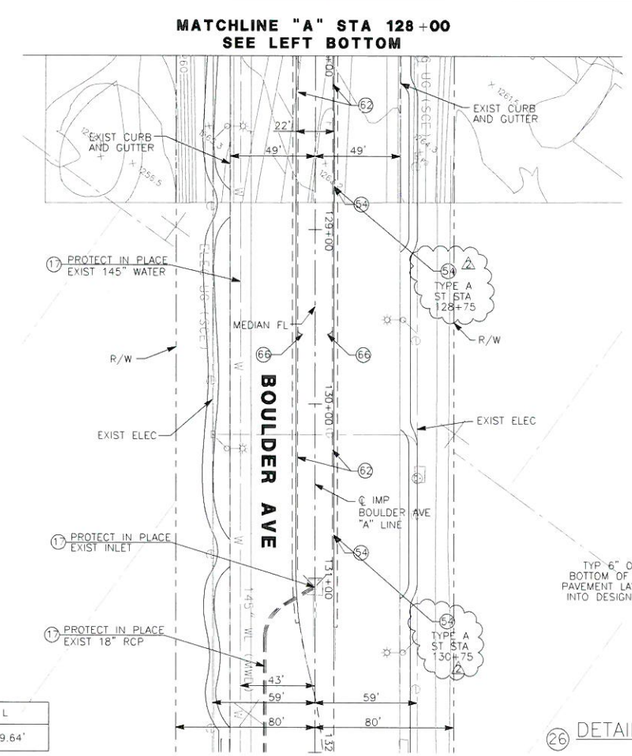

CONSTRUCTION NOTES

(1) CONSTRUCT 24" RCP (D-LOAD PER PROFILE).
(14) CONSTRUCT 10' x 6' DOUBLE RCB PER CALTRANS STANDARD PLAN D81.
(17) PROTECT IN PLACE EXISTING FACILITY.
(19) CONSTRUCT CONCRETE INLET WINGWALL TRANSITION STRUCTURE W/ 4' CUT-OFF WALL PER DETAIL ON SHEET 23.
(20) CONSTRUCT WINGWALL STRUCTURE PER CALTRANS STANDARD PLAN D84 TYPE B AND fc'=4000 PSI.
(2) REMOVE EXISTING.
(26) CONSTRUCT FULL DEPTH SLURRY CEMENT BACKFILL PER DETAIL ON SHEET 20.
(31) CONSTRUCT CONCRETE BULKHEAD PER DETAIL SHOWN ON SHEET 25.
(37) RELOCATE EXISTING FACILITY BY OTHER.
(47) CONSTRUCT ROCK SLOPE PROTECTION PER DETAIL ON SHEET 21.
(54) CONSTRUCT MEDIAN CURB OPENING PER DETAIL ON SHEET 25, TYPE PER PLAN.
(61) CONSTRUCT LIQUID BOOT IMPERMEABLE LINER PER DETAIL ON SHEET 22, OR APPROVED EQUAL.
(62) CONSTRUCT MEDIAN EDGE DRAIN PER DETAIL ON SHEET 25.
(66) CONSTRUCT EDGE DRAIN CLEANOUT AT 200' O.C. PER CALTRANS 2006 STANDARD PLAN NO. D99C.
(70) CONSTRUCT CHAIN LINK FENCE PER SBCFCD STANDARD PLAN SPECIAL DRAWING I.

REGISTERED PROFESSIONAL ENGINEER PAUL K. C. LAU No. 38388 EXP. DATE 03/31/15 CIVIL STATE OF CALIFORNIA

AS-BUILT
Paul Lau 06/10/14
NO AS-BUILT CHANGES

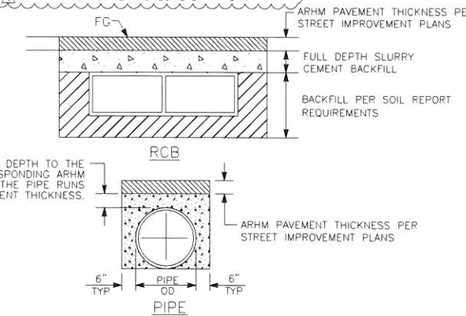

(26) DETAIL – FULL DEPTH SLURRY CEMENT BACKFILL
NO SCALE

BENCHMARK
S.P.S.N. 00586
6"x 6" CONC POST WITH DRIVE PIN LOCATED 1 MILE S.E. ALONG S.F.RR FROM RR CROSSING AT BOULDER AVE., AT SOUTH END OF ST. HWY R/W FENCE, 23.5 FT. NORTH OF NORTH RAIL OF RR, 41 FT. EAST OF BOULDER AVE., NORTHBOUND TRAFFIC LANE, 12 FT. NORTH OF CULVERT HEADWALL.
ELEV. = 1353.459'

REGISTERED PROFESSIONAL ENGINEER EDWARD NG No. 46767 Exp. 6/30/13 CIVIL STATE OF CALIFORNIA

SUBMITTED BY: DATE: 10/4/11

PLANS PREPARED BY:
AECOM
901 VIA PIEMONTE, 5TH FLOOR
ONTARIO, CA 91764

REVISIONS

MARK	DESCRIPTION	APPR.	DATE
2	CURB OPENING TYPE		
1	CCO #1		

CITY OF HIGHLAND

DESIGNED BY JY/NL | DRAWN BY JY/NL | CHECKED BY PL
SUBMITTED BY PAUL LAU
RECOMMENDED BY EDWARD NG 10/04/11
EDWARD NG DATE
R.C.E. 46767 EXP. 6-30-13

APPROVED BY Ernest Wong 1.13.12
ERNEST WONG, CITY ENGINEER DATE
R.C.E. 37413 EXP. 6-30-12

BOULDER AVENUE BRIDGE OVER CITY CREEK (REPLACEMENT)

STORM DRAIN PLAN AND PROFILE BLEDSOE CREEK CHANNEL & CULVERT #6

DRAWER NO.

SHEET 20R2 OF 37

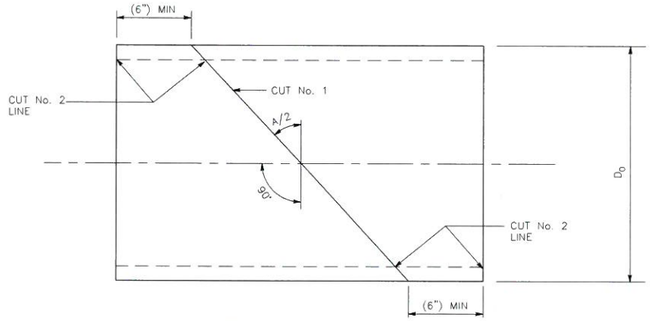

DETAIL A (SEE NOTE 8)

SONO-TUBE, OR EQUAL, INTERIOR FORM

CUT No. 1: SAW THE TUBE AT AN ANGLE OF A/2 WITH THE TRANSVERSE PLANE. REVERSE ONE SECTION AND TAPE BOTH SECTONS TOGETHER FORMING THE DEFLECTION ANGLE A.

CUT No. 2: SAW THE TUBE LONGITUDINALLY REMOVING A STRIP 3.14 (D_o-D) WIDE ON THE SIDE OPPOSITE THE OPEN JOINT. BEND THE ENDS OF THE CUT TOGETHER AND INSERT THE TUBE IN THE PIPE.

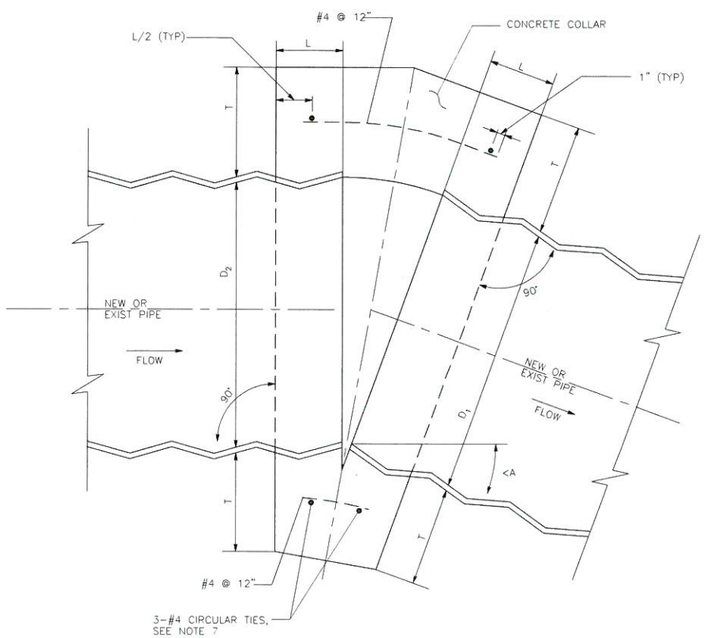

(22) CONCRETE COLLAR DETAIL FOR CSP

NO SCALE

NOTES:

1. A CONCRETE COLLAR IS REQUIRED WHERE THE CHANGE IN GRADE EXCEEDS 10%.
2. CONNECTOR PIPES
   A. WHERE PIPES OF DIFFERENT DIAMETERS ARE JOINED WITH A CONCRETE COLLAR, L AND T SHALL BE THOSE OF THE LARGER PIPE . D=D_1 OR D_2, WHICHEVER IS GREATER.
   B. WHEN D_1 IS EQUAL TO OR LESS THAN D_2, JOIN INVERTS AND WHEN D_1 IS GREATER THAN D_2, JOIN SOFFITS.
3. FOR PIPE LARGER THAN 72" SPECIAL COLLAR DETAILS ARE REQUIRED.
4. FOR PIPE SIZE NOT LISTED USE NEXT SIZE LARGER.
5. REINFORCEMENT SHALL CONFORM TO ASTM A 615 GRADE 40.
6. WHERE REINFORCING IS REQUIRED THE DIAMETER OF THE CIRCULAR TIES SHALL BE D+(2X WALL THICKNESS) + T.
7. REIFORCING SHALL BE USED WHERE THE PIPE DIAMETER IS GREATER THAN 21" AND ON ALL PIPES WHERE THE SPACES BETWEEN THE EXTREME OUTER ENDS IS 3" OR LARGER.

CIRCULAR TIES

PIPE DIAMETER	No. OF CIRCULAR TIES
21" OR LESS	3
24" TO 30"	3
33" TO 57"	4
60" TO 72"	5

WHERE THE SPACE BETWEEN PIPE ENDS EXCEEDS 3" THE NUMBER OF CIRCULAR TIES SHALL BE INCREASED TO MAINTAIN AN APPROXIMATE SPACING OF 6" O.C.

8. WHERE THE PIPE IS 21" OR LESS IN DIAMETER AN INTERIOR FORM OF UNSEALED SONO-TUBE OR EQUAL SHALL BE USED TO PROVIDE A SMOOTH INTERIOR JOINT.THE PAPER FORM MAY BE LEFT IN PLACE (SEE DETAIL A). WHEN THE PIPE IS 24" OR LARGER A REMOVABLE INTERIOR FORM SHALL BE USED OR THE INTERIOR JOINT SHALL BE COMPLETELY FILLED WITH MORTAR AND NEATLY POINTED.

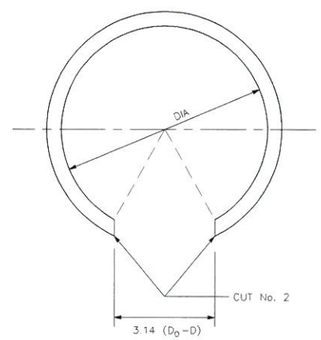

D	L	T
12"	12"	4"
18"	12"	5"
24"	12"	6"
30"	18"	7"
36"	18"	9"
42"	18"	9"
48"	18"	10"
54"	18"	10"
60"	21"	11"
66"	21"	11"
72"	24"	12"

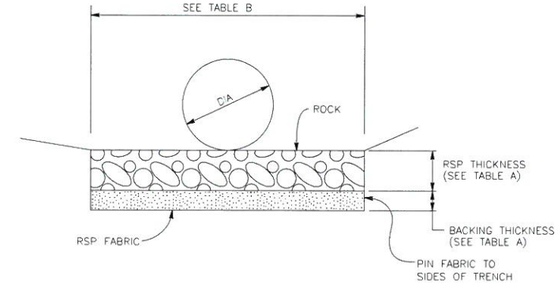

SECTION A–A

NOTES:

1. RSP FABRIC SHALL NOT PROTUDE ABOVE GROUND. TRIM FABRIC BELOW GROUND TO NO MORE THAN TWO INCHES BELOW GROUND SURFACE.
2. RSP DIMENSIONS PER TABLE B OR AS SHOWN OTHERWISE ON THE PLANS.

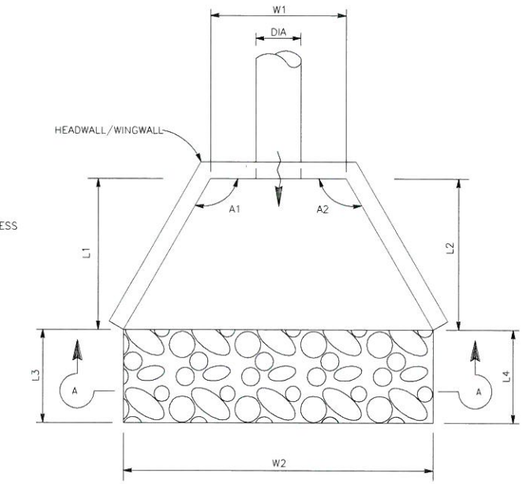

PLAN

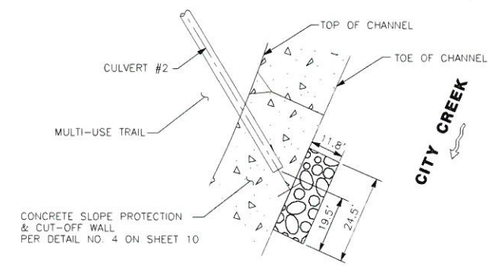

DETAIL – CULVERT #2

REGISTERED PROFESSIONAL ENGINEER PAUL K. C. LAU No. 38388 EXP. DATE 06/31/15 CIVIL STATE OF CALIFORNIA

AS-BUILT
Paul Lau 06/10/14
NO AS-BUILT CHANGES

TABLE A ⚠1

RSP CLASS	RSP MINIMUM THICKNESS (FT)	INNER LAYER RSP CLASS	BACKING CLASS NO.	BACKING THICKNESS (FT)	RSP-FABRIC TYPE	TOTAL THICKNESS (FT)	PLACEMENT METHOD
BACKING NO. 1	2.0	NONE	NONE	0	8	2.00	A
1/4 T	3.3	NONE	2	1.25	8	4.55	A
1/2 T	3.4	NONE	1	1.80	8	5.20	A

TABLE B ⚠1

RSP SUMMARY										
CULVERT NO.	STATION	RSP CLASS	W1 (FT)	W2 (FT)	L1 (FT)	L2 (FT)	L3 (FT)	L4 (FT)	A1 (DEG)	A2 (DEG)
2	108+44	1/4 T	DETAIL HEREON	DETAIL HEREON	DETAIL HEREON	DETAIL HEREON	DETAIL HEREON	DETAIL HEREON	DETAIL HEREON	DETAIL HEREON
3	117+74	BACKING NO. 1	N/A	10.94'	N/A	N/A	1.00'	1.00'	N/A	N/A
4	123+88	BACKING NO. 1	N/A	15.97'	N/A	N/A	3.34'	3.13'	N/A	N/A
5	120+49	BACKING NO. 1	3.75'	14.00'	5.12'	5.12'	8.38'	8.38'	135°	135°
BLEDSOE CREEK CHANNEL	125+64	1/2 T	45.00'	45.00'	N/A	N/A	34.50'	34.31'	N/A	N/A

(47) ROCK SLOPE PROTECTION DETAIL

NO SCALE

NOTE:
THE CONTRACTOR SHALL VERIFY ALL CONTROLLING FIELD DIMENSIONS BEFORE ORDERING OR FABRICATING ANY MATERIAL.

BENCHMARK
S.P.S.N. 00586
6"x 6" CONC POST WITH DRIVE PIN LOCATED 1 MILE S.E. ALONG S.F.RR FROM RR CROSSING AT BOULDER AVE., AT SOUTH END OF ST. HWY R/W FENCE, 23.5 FT. NORTH OF NORTH RAIL OF RR, 41 FT. EAST OF BOULDER AVE., NORTHBOUND TRAFFIC LANE, 12 FT. NORTH OF CULVERT HEADWALL.
ELEV. = 1353.459'

REGISTERED PROFESSIONAL ENGINEER EDWARD NG No. 46767 Exp. 6/30/13 CIVIL STATE OF CALIFORNIA

SUBMITTED BY: DATE: 10/4/11

PLANS PREPARED BY:
AECOM
901 VIA PIEMONTE, 5TH FLOOR
ONTARIO, CA 91764

REVISIONS

MARK	DESCRIPTION	APPR.	DATE
⚠1	CCO #1		

CITY OF HIGHLAND

DESIGNED BY JY/NL | DRAWN BY JY/NL | CHECKED BY PL
SUBMITTED BY PAUL LAU
RECOMMENDED BY EDWARD NG 10/04/11
EDWARD NG R.C.E. 46767 EXP. 6-30-13 DATE
APPROVED BY Ernest Wong 1.13.12
ERNEST WONG, CITY ENGINEER R.C.E. 37413 EXP. 6-30-12 DATE

BOULDER AVENUE BRIDGE OVER CITY CREEK (REPLACEMENT)

STORM DRAIN PLAN DRAINAGE DETAILS NO. 1

DRAWER NO.

SHEET 21R1 OF 37

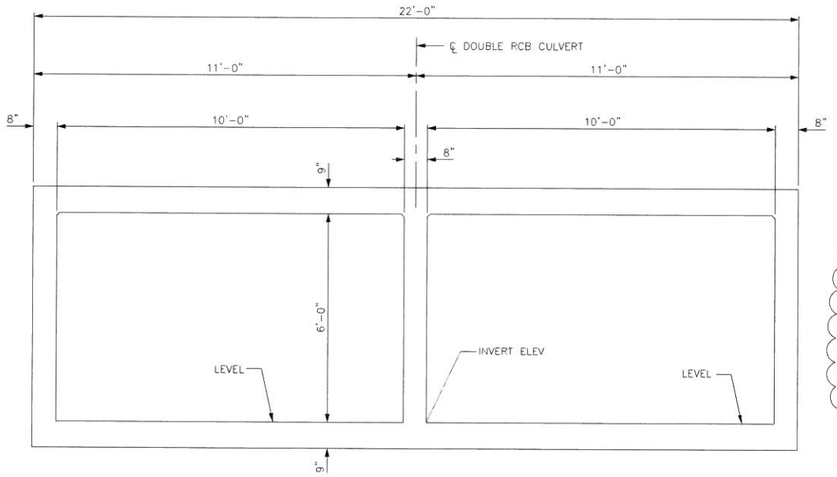

RCB TYPICAL SECTION (D81)

½" = 1'-0"

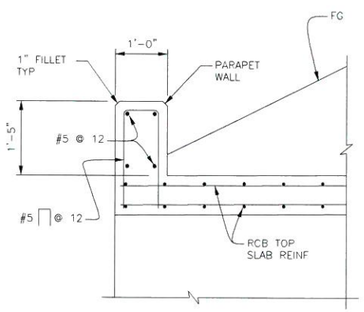

PARAPET WALL DETAIL

3/4" = 1'-0"

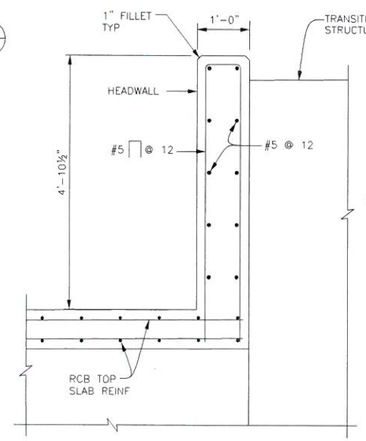

HEADWALL DETAIL

3/4" = 1'-0"

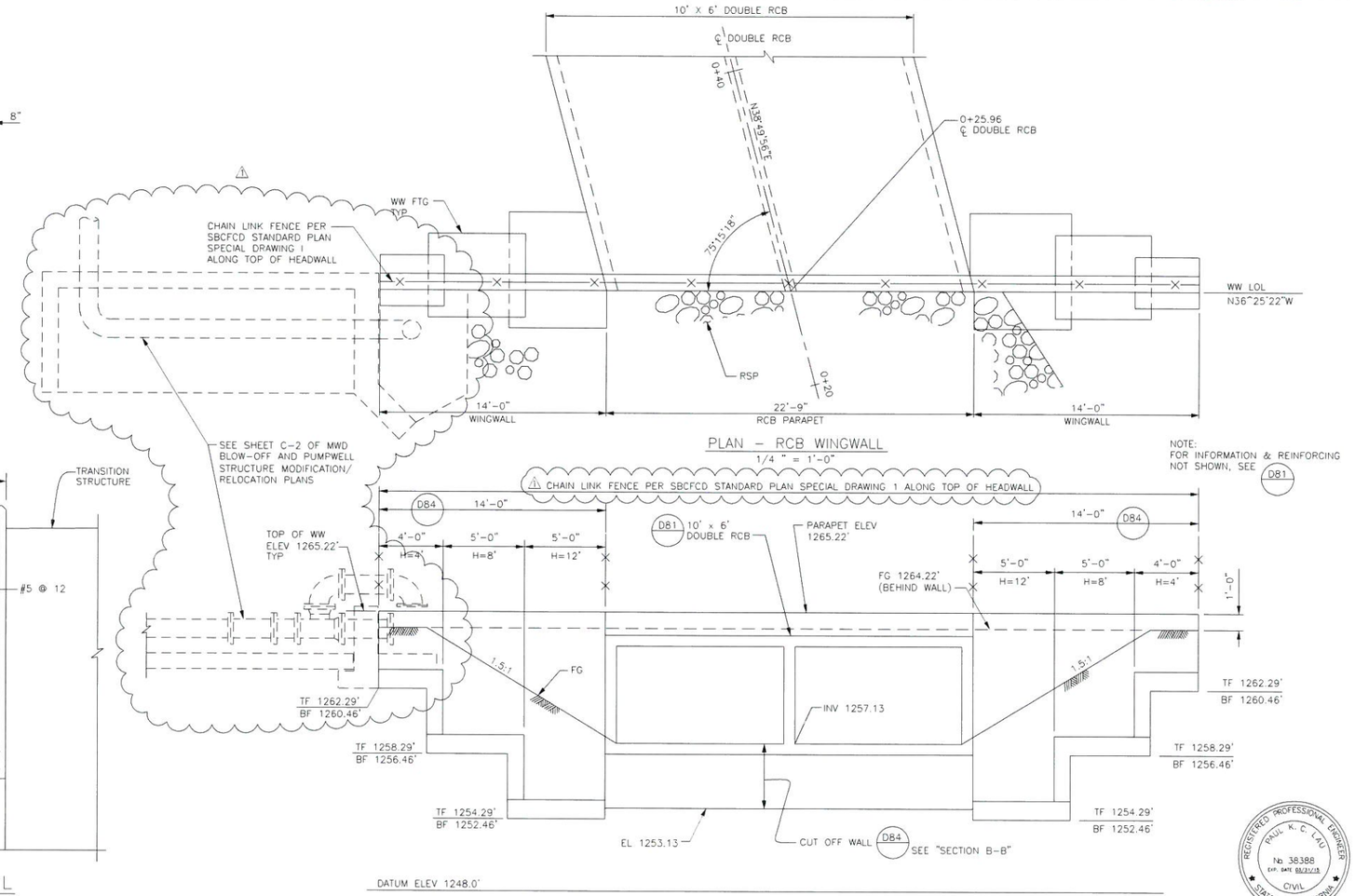

PLAN – RCB WINGWALL

1/4 " = 1'-0"

NOTE:
FOR INFORMATION & REINFORCING NOT SHOWN, SEE (D81)

ELEVATION – RCB WINGWALL

1/4 " = 1'-0"

WINGWALL DETAILS

REGISTERED PROFESSIONAL ENGINEER PAUL K. C. LAU No. 38388 EXP. DATE 06/30/13 CIVIL STATE OF CALIFORNIA

AS-BUILT
Paul Lau 06/10/14
NO AS-BUILT CHANGES

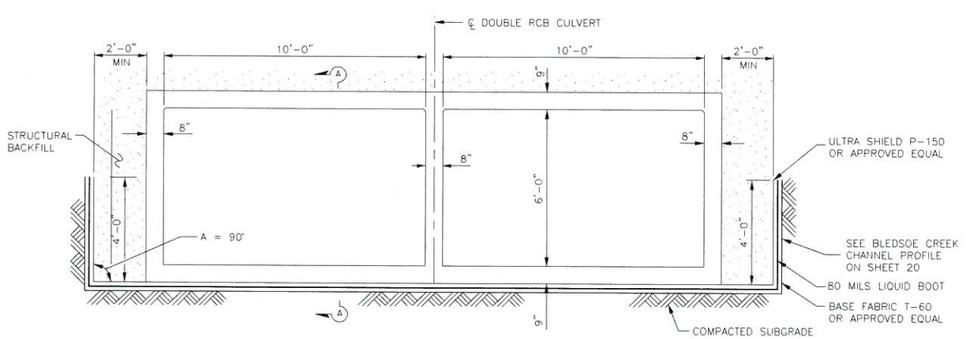

(61) LIQUID BOOT IMPERMEABLE LINER DETAIL

NO SCALE

(SPECIFICATIONS PER MANUFACTURER STANDARDS OR APPROVED EQUAL)

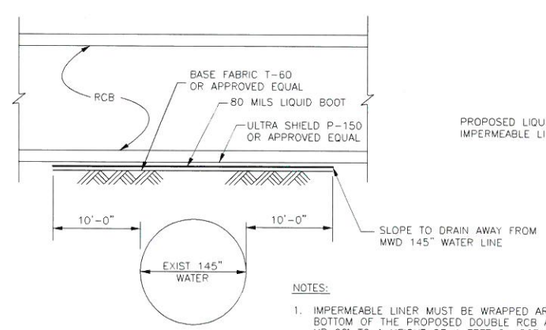

SECTION A–A

NO SCALE

NOTES:

1. IMPERMEABLE LINER MUST BE WRAPPED AROUND THE BOTTOM OF THE PROPOSED DOUBLE RCB AND FOLDED UP 90° TO A HEIGHT OF 4 FEET ON BOTH SIDES OF THE EXCAVATION, FOR A DISTANCE OF 10 FEET BEYOND THE EDGES OF THE EXISTING 145" WATER LINE.
2. THE BOTTOM OF CB NO. 5 & CULVERT #7 MUST BE WRAPPED WITH IMPERMEABLE LINER. DIMENSIONS SPECIFIED HEREON AND ON SHEET 19.

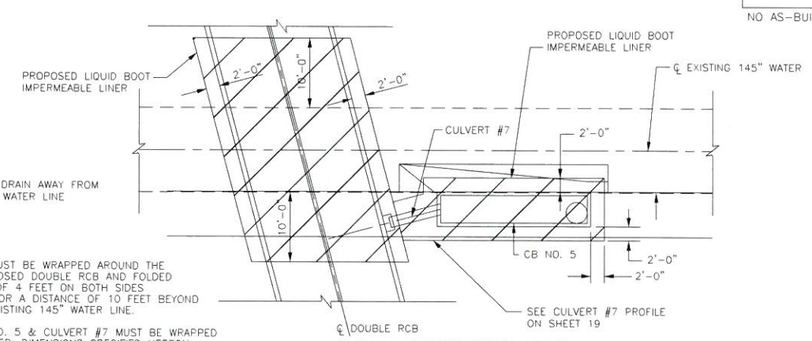

PLAN – IMPERMEABLE LINER

NO SCALE

NOTE:
THE CONTRACTOR SHALL VERIFY ALL CONTROLLING FIELD DIMENSIONS BEFORE ORDERING OR FABRICATING ANY MATERIAL.

BENCHMARK

S.P.S.N. 00586
6'x 6' CONC POST WITH DRIVE PIN LOCATED 1 MILE S.E. ALONG S.F.RR FROM RR CROSSING AT BOULDER AVE., AT SOUTH END OF ST. HWY R/W FENCE, 23.5 FT. NORTH OF NORTH RAIL OF RR, 41 FT. EAST OF BOULDER AVE., NORTHBOUND TRAFFIC LANE, 12 FT. NORTH OF CULVERT HEADWALL. ELEV. = 1353.459'

REGISTERED PROFESSIONAL ENGINEER EDWARD NG No. 46767 Exp. 6/30/13 CIVIL STATE OF CALIFORNIA

SUBMITTED BY:

DATE: 10/4/11

PLANS PREPARED BY:

AECOM
901 VIA PIEMONTE, 5TH FLOOR
ONTARIO, CA 91764

REVISIONS

MARK	DESCRIPTION	APPR.	DATE
1	CCO #1		

CITY OF HIGHLAND

DESIGNED BY JY/NL | DRAWN BY JY/NL | CHECKED BY PL

SUBMITTED BY PAUL LAU

RECOMMENDED BY EDWARD NG 10/04/11
EDWARD NG R.C.E. 46767 EXP. 6-30-13 DATE

APPROVED BY 1.13.12
ERNEST WONG, CITY ENGINEER R.C.E. 37413 EXP. 6-30-12 DATE

BOULDER AVENUE BRIDGE OVER CITY CREEK (REPLACEMENT)

STORM DRAIN PLAN DRAINAGE DETAILS NO. 2

DRAWER NO.

SHEET 22R1 OF 37

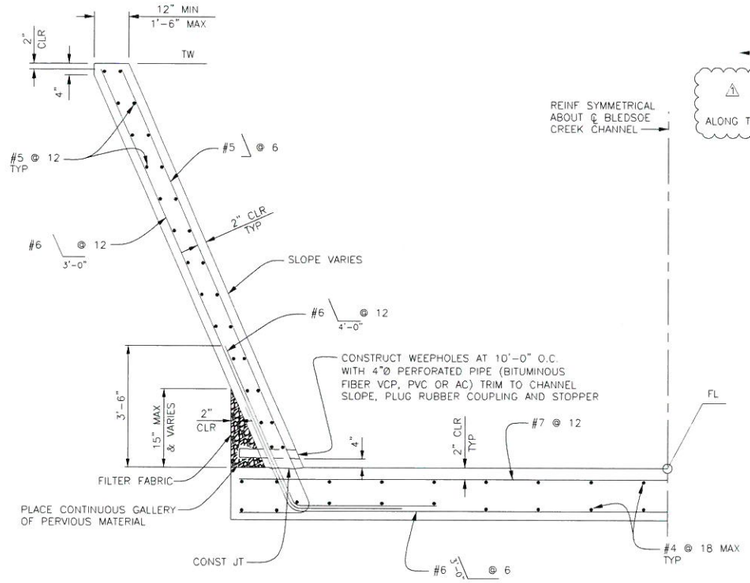

TRANSITION WALL REINFORCEMENT

½" = 1'-0"

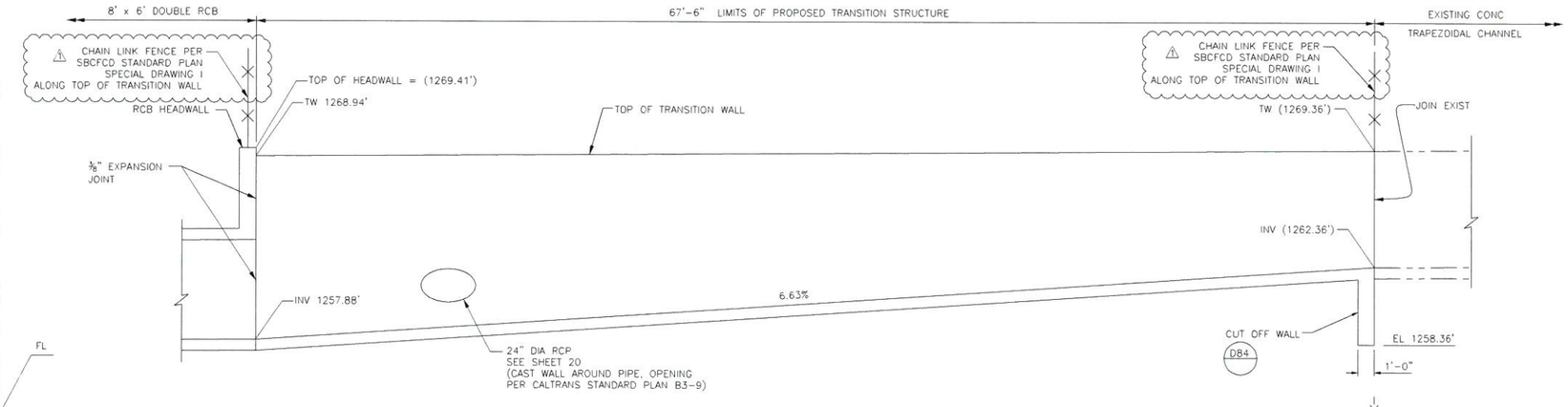

TRANSITION WALL ELEVATION

1/4 " = 1'-0"

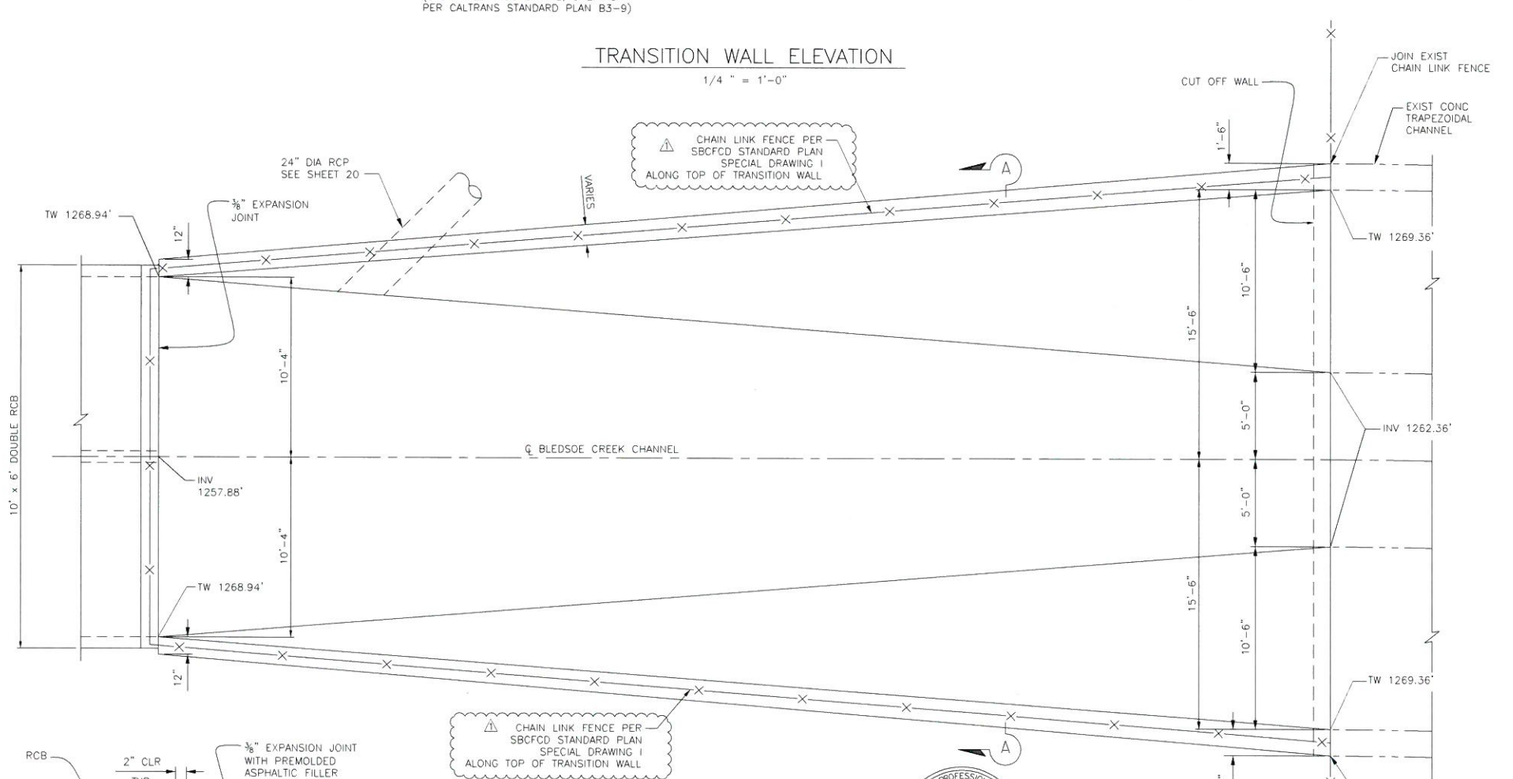

TRANSITION WALL PLAN

1/4 " = 1'-0"

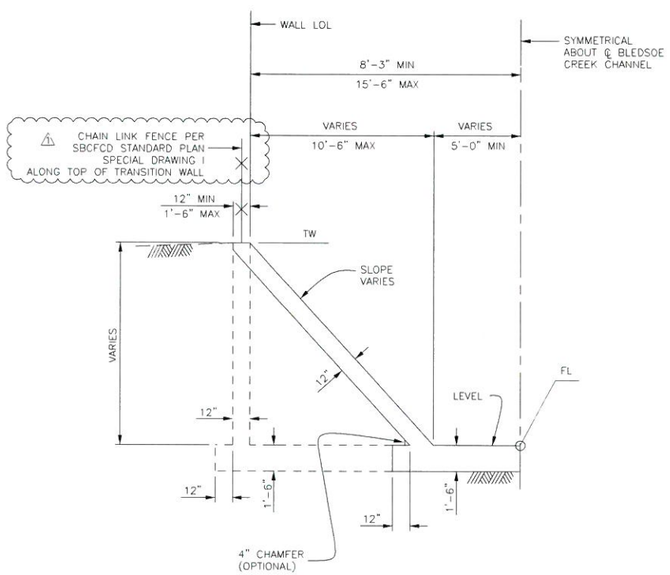

SECTION A–A

¼" = 1'-0"

(FOR REINFORCEMENT SEE "TRANSITION WALL REINFORCEMENT")

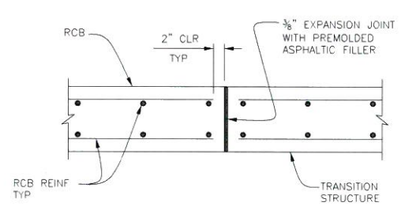

EXPANSION JOINT DETAIL

NO SCALE

NOTE:
THE CONTRACTOR SHALL VERIFY ALL CONTROLLING FIELD DIMENSIONS BEFORE ORDERING OR FABRICATING ANY MATERIAL.

REGISTERED PROFESSIONAL ENGINEER PAUL K. C. LAU No. 38388 EXP. DATE 03/31/15 CIVIL STATE OF CALIFORNIA

AS-BUILT
Paul Lau 06/10/14
NO AS-BUILT CHANGES

BENCHMARK
S.P.S.N. 00586
6'x 6' CONC POST WITH DRIVE PIN LOCATED 1 MILE S.E. ALONG S.F.RR FROM RR CROSSING AT BOULDER AVE., AT SOUTH END OF ST. HWY R/W FENCE, 23.5 FT. NORTH OF NORTH RAIL OF RR, 41 FT. EAST OF BOULDER AVE., NORTHBOUND TRAFFIC LANE, 12 FT. NORTH OF CULVERT HEADWALL.
ELEV. = 1353.459'

REGISTERED PROFESSIONAL ENGINEER EDWARD NG No. 46767 Exp. 6/30/13 CIVIL STATE OF CALIFORNIA

SUBMITTED BY: DATE: 10/4/11

PLANS PREPARED BY:
AECOM
901 VIA PIEMONTE, 5TH FLOOR
ONTARIO, CA 91764

REVISIONS

MARK	DESCRIPTION	APPR.	DATE
1	CCO #1		

CITY OF HIGHLAND

DESIGNED BY JY/NL | DRAWN BY JY/NL | CHECKED BY PL
SUBMITTED BY PAUL LAU
RECOMMENDED BY EDWARD NG 10/04/11
EDWARD NG DATE
R.C.E. 46767 EXP. 6-30-13

APPROVED BY Ernest Wong 1.13.12
ERNEST WONG, CITY ENGINEER DATE
R.C.E. 37413 EXP. 6-30-12

BOULDER AVENUE BRIDGE OVER CITY CREEK (REPLACEMENT)

STORM DRAIN PLAN DRAINAGE DETAILS NO. 3

DRAWER NO.

SHEET 23R1 OF 37

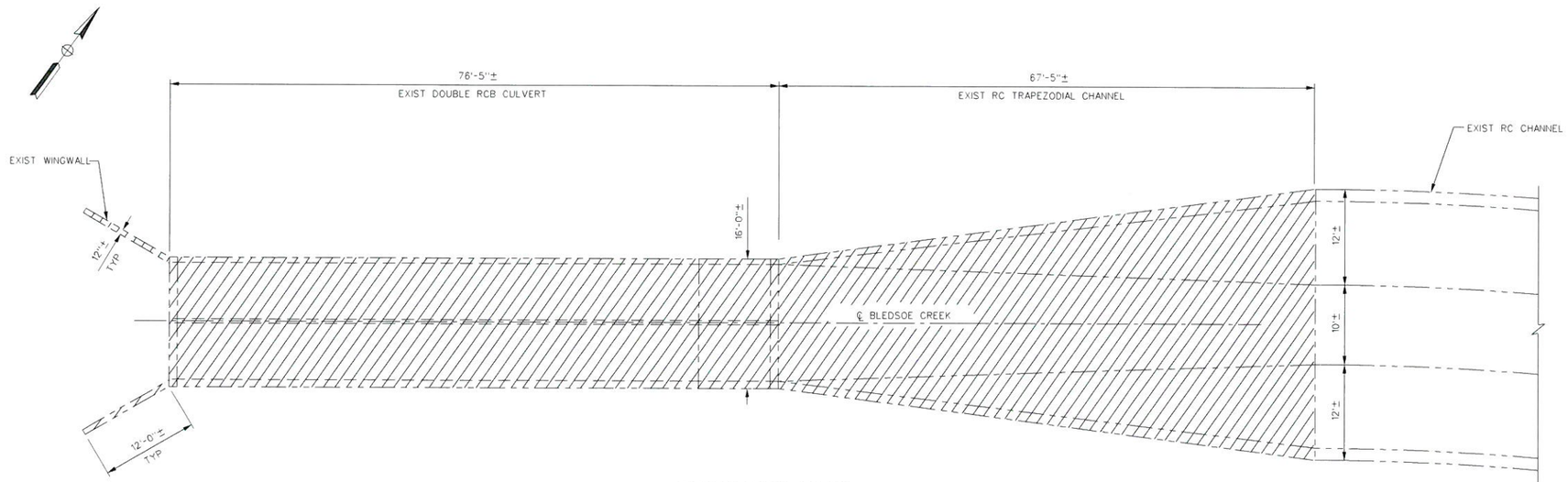

DEMOLITION PLAN
1/8" = 1'-0"

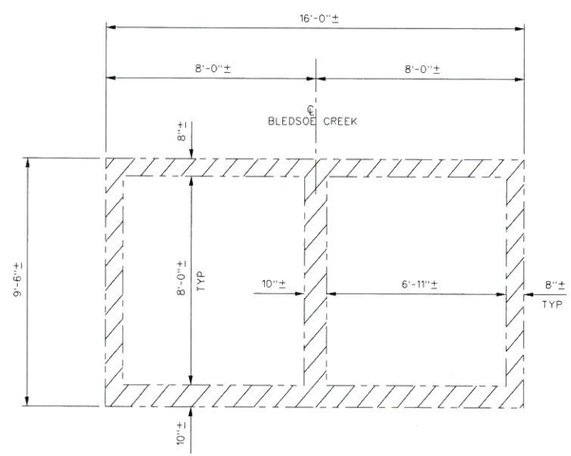

DOUBLE RCB SECTION
3/8" = 1'-0"

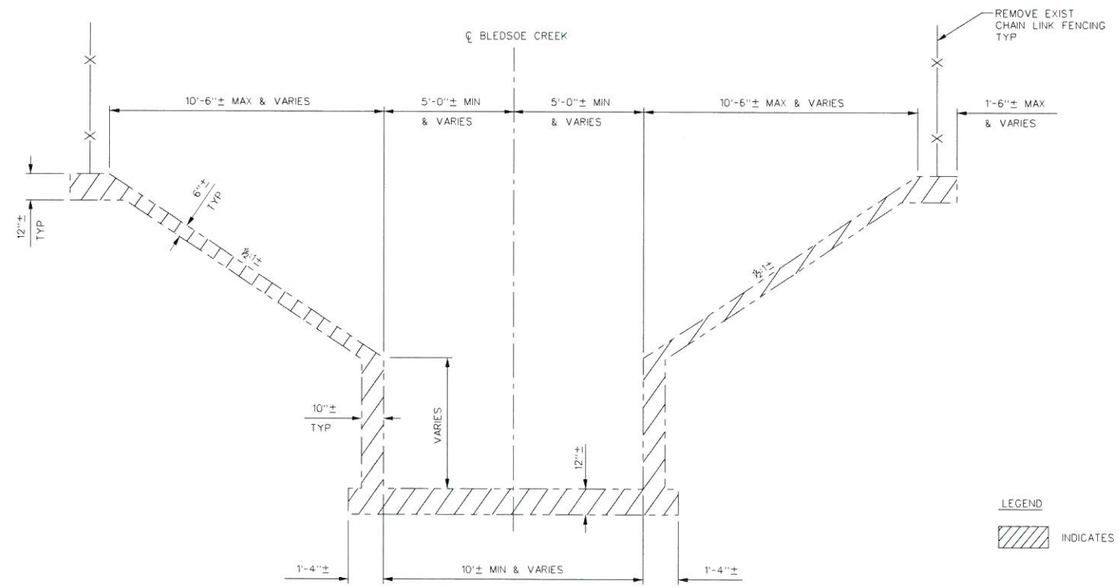

TRANSITION STRUCTURE SECTION
3/8" = 1'-0"

LEGEND

INDICATES LIMITS OF EXIST STRUCTURE REMOVAL

REGISTERED PROFESSIONAL ENGINEER PAUL K. C. LAU No. 38388 EXP. DATE 03/31/15 CIVIL STATE OF CALIFORNIA

AS-BUILT
Per Original Plan
Paul Lau 06/10/14

NO AS-BUILT CHANGES

NOTE:
THE CONTRACTOR SHALL VERIFY ALL CONTROLLING FIELD DIMENSIONS BEFORE ORDERING OR FABRICATING ANY MATERIAL.

BENCHMARK
S.P.S.N. 00586
6'x 6' CONC POST WITH DRIVE PIN LOCATED 1 MILE S.E. ALONG S.F.RR FROM RR CROSSING AT BOULDER AVE., AT SOUTH END OF ST. HWY R/W FENCE, 23.5 FT. NORTH OF NORTH RAIL OF RR; 41 FT. EAST OF BOULDER AVE., NORTHBOUND TRAFFIC LANE, 12 FT. NORTH OF CULVERT HEADWALL.
ELEV. = 1353.459'

REGISTERED PROFESSIONAL ENGINEER EDWARD NG No. 46767 Exp. 6/30/13 CIVIL STATE OF CALIFORNIA

SUBMITTED BY: DATE: 10/4/11

PLANS PREPARED BY:
AECOM
901 VIA PIEMONTE, 5TH FLOOR
ONTARIO, CA 91764

REVISIONS

MARK	DESCRIPTION	APPR.	DATE

CITY OF HIGHLAND

DESIGNED BY JY/NL | DRAWN BY JY/NL | CHECKED BY PL
SUBMITTED BY PAUL LAU
RECOMMENDED BY EDWARD NG 10/04/11
EDWARD NG DATE
R.C.E. 46767 EXP. 6-30-13

APPROVED BY
Ernest Wong 10.6.11
ERNEST WONG, CITY ENGINEER DATE
R.C.E. 37413 EXP. 6-30-12

BOULDER AVENUE BRIDGE OVER CITY CREEK (REPLACEMENT)

STORM DRAIN PLAN DRAINAGE DETAILS NO. 4

DRAWER NO.

SHEET 24 OF 37

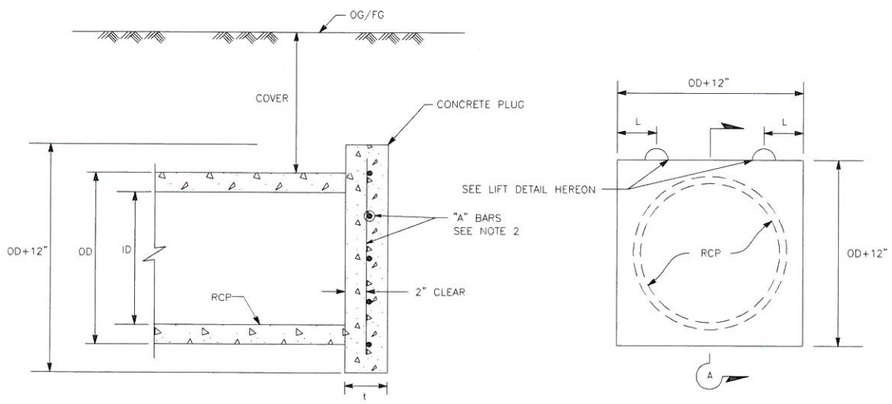

SECTION A

FRONT VIEW

ID (IN)	MAX COVER (FT)	t (IN)	"A" BARS	L, P
24	10	4	4 @ 4	1'

(31) CONCRETE BULKHEAD
NO SCALE

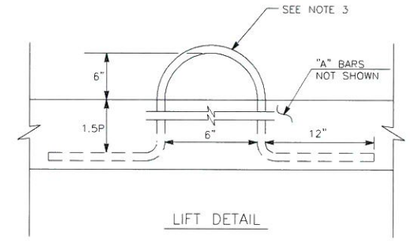

LIFT DETAIL

NOTES:

1. CONCRETE SHALL BE CLASS 'A'.
2. ALL REINFORCING STEEL SHALL BE CENTERED IN BULKHEAD EXCEPT FOR PIPE DIA. GREATER THAN 96", VERTICAL "A" BARS SHALL BE PLACED AT 2" CLEAR FROM THE INSIDE FACE OF THE BULKHEAD. HORIZONTAL "A" BARS SHALL BE PLACED TOWARDS OUTSIDE FACE OF BULKHEAD PER DETAIL.
3. LIFTS SHALL BE WOVEN STEEL CABLE WITH SAME MINIMUM DIAMETER AS "A" BARS. WEAVE CABLE THROUGH HORIZONTAL "A" BARS. COAT EXPOSED PORTION OF CABLE LIFTS WITH AN APPROVED BITUMINOUS PAINT PRIOR TO BACKFILLING TRENCH.

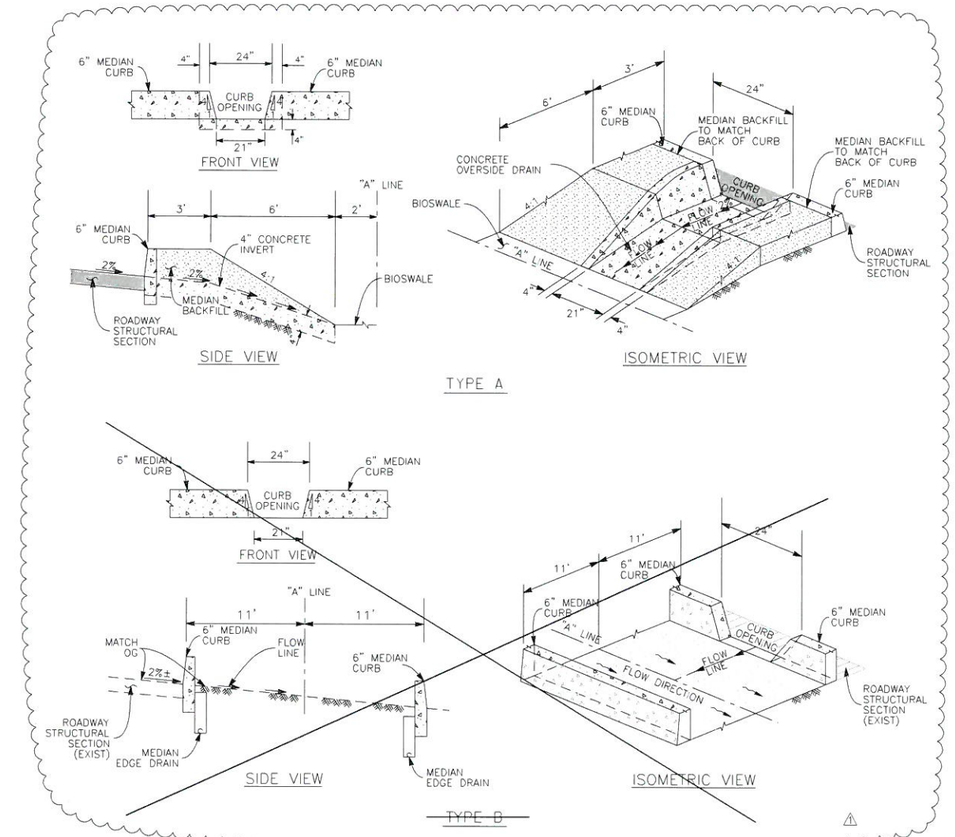

(54) MEDIAN CURB OPENING DETAIL
NO SCALE

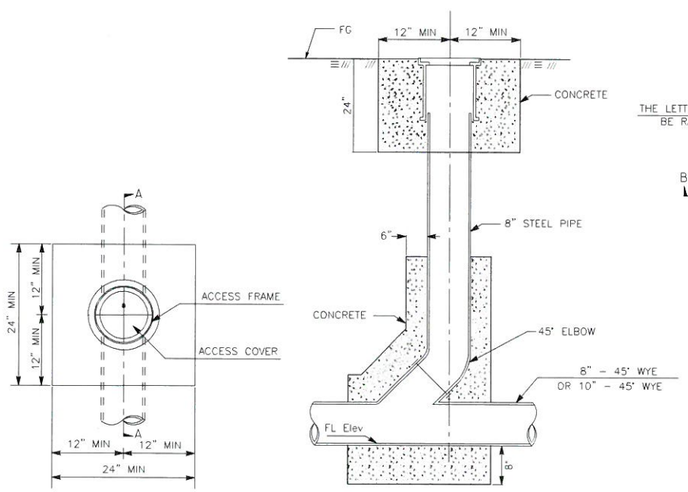

PLAN VIEW

SECTION A-A

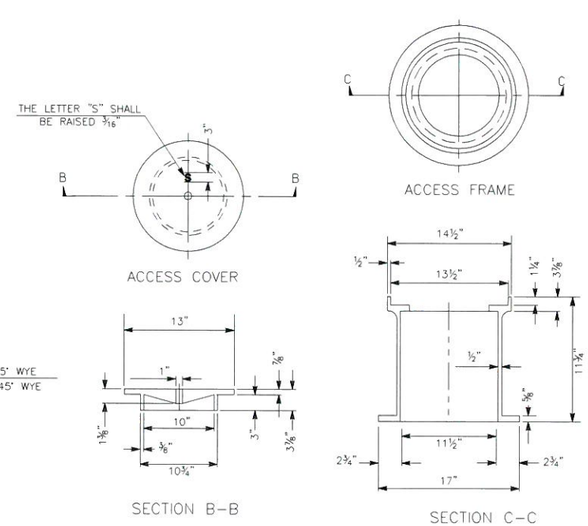

SECTION B-B

SECTION C-C

NOTES:

1. PIPES AND FITTINGS SHALL BE PROPERLY ALIGNED AND MAINTAINED WHILE CONCRETE IS BEING PLACED AND ALLOWED TO HARDEN. JOINTS FOR PIPES AND FITTINGS SHALL BE MADE PRIOR TO PLACING CONCRETE. CONCRETE FOR BEDDING, ENCASEMENT, AND WALL SUPPORT FOR PIPES AND FITTINGS SHALL BE PLACED UNIFORMLY AROUND THE PIPE AND FITTINGS AS SHOWN HEREON TO MAINTAIN PROPER ALIGNMENT, AND SHALL BE CLASS 420-C-2000.
2. THE ACCESS FRAME, COVER AND CAP SHALL BE CAST IRON. THE FINGER HOLES MAY BE DRILLED OUT OR MAY BE BLOCKED OUT PRIOR TO CASTING; THEY SHALL NOT BE PUNCHED OUT.
3. THE CONTRACTOR, AT HIS OPTION, MAY PLACE EITHER CIRCULAR OR SQUARE CONCRETE PIPE WALL SUPPORTS AS SHOWN HEREON.

(55) CLEANOUT DETAIL
NO SCALE

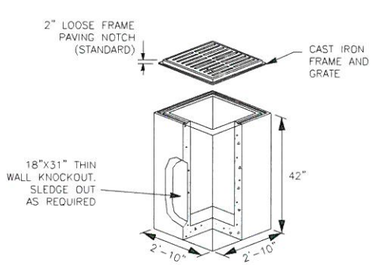

(49) 2' X 2' PRECAST CB DETAIL
NO SCALE

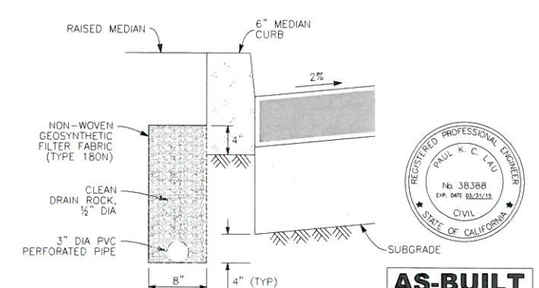

(62) MEDIAN EDGE DRAIN
NO SCALE

REGISTERED PROFESSIONAL ENGINEER PAUL K. C. LAU No. 38388 EXP. DATE 03/31/15 CIVIL STATE OF CALIFORNIA

AS-BUILT
Paul Lau 06/10/14
NO AS-BUILT CHANGES

NOTE:
THE CONTRACTOR SHALL VERIFY ALL CONTROLLING FIELD DIMENSIONS BEFORE ORDERING OR FABRICATING ANY MATERIAL.

BENCHMARK
S.P.S.N. 00586
6'x 6' CONC POST WITH DRIVE PIN LOCATED 1 MILE S.E. ALONG S.F.RR FROM RR CROSSING AT BOULDER AVE., AT SOUTH END OF ST. HWY R/W FENCE, 23.5 FT. NORTH OF NORTH RAIL OF RR, 41 FT. EAST OF BOULDER AVE., NORTHBOUND TRAFFIC LANE, 12 FT. NORTH OF CULVERT HEADWALL.
ELEV. = 1353.459'

REGISTERED PROFESSIONAL ENGINEER EDWARD NG No. 46767 Exp. 6/30/13 CIVIL STATE OF CALIFORNIA

SUBMITTED BY: Ed
DATE: 10/4/11

PLANS PREPARED BY:
AECOM
901 VIA PIEMONTE, 5TH FLOOR
ONTARIO, CA 91764

REVISIONS

MARK	DESCRIPTION	APPR.	DATE
1	CCO #1		

CITY OF HIGHLAND

DESIGNED BY	DRAWN BY	CHECKED BY
JY/NL	JY/NL	PL

SUBMITTED BY: PAUL LAU
RECOMMENDED BY: EDWARD NG 10/04/11
EDWARD NG DATE
R.C.E. 46767 EXP. 6-30-13

APPROVED BY: Ernest Wong 10.6.11
ERNEST WONG, CITY ENGINEER DATE
R.C.E. 37413 EXP. 6-30-12

BOULDER AVENUE BRIDGE OVER CITY CREEK (REPLACEMENT)

STORM DRAIN PLAN
DRAINAGE DETAILS NO. 5

DRAWER NO.

SHEET 25R1 OF 37

GENERAL STRIPING AND SIGNING NOTES

1. ALL WORK, MATERIALS AND EQUIPMENT FOR SIGNING, STRIPING AND PAVEMENT MARKINGS SHALL CONFORM TO THESE PLANS AND THE STANDARD SPECIFICATIONS OF THE CITY OF HIGHLAND AND THE STATE OF CALIFORNIA (CALTRANS) DATED MAY 2006.
2. PAVEMENT MARKERS AND TRAFFIC STRIPING DIMENSIONS SHALL CONFORM TO CALTRANS STANDARD PLANS DATED MAY 2006 AND SAN BERNARDINO COUNTY STANDARD PLANS DATED DECEMBER 2005.
3. ALL STRIPING AND PAVEMENT MARKINGS SHALL BE THERMOPLASTIC.
4. THE CONTRACTOR SHALL BE RESPONSIBLE FOR MAINTAINING BARRICADES, DELINEATORS OR TRAFFIC CONTROL AT ALL TIMES.
5. ALL CONFLICTING PAVEMENT STRIPING AND MARKINGS SHALL BE REMOVED BY EITHER SAND-BLASTING (IF PAINTED) OR BY GRINDING (IF THERMOPLASTIC).

SIGNING AND STRIPING NOTES

1. REMOVE EXISTING STRIPING OR PAVEMENT MARKINGS PER GENERAL STRIPING & SIGNING NOTES NO. 5
2. APPLY LANELINE PER CALTRANS STANDARD PLAN NO. A20A, DETAIL 12
3. APPLY MEDIAN ISLAND PER CALTRANS STANDARD PLAN NO. A20A, DETAIL 22
4. PAINT 4" SOLID WHITE LANE LINE
5. APPLY 8" SOLID WHITE CHANNELIZING LINE PER CALTRANS STANDARD PLAN NO.A20D, DETAIL 38
6. APPLY 6" SOLID WHITE BIKE LANE LINE PER CALTRANS STANDARD PLAN NO.A20D, DETAIL 39
7. PAINT 6" WHITE BIKE LANE INTERSECTION LINE PER CALTRANS STANDARD PLAN NO.A20D, DETAIL 39A
8. APPLY 4" SOLID WHITE RIGHT EDGELINE PER CALTRANS STANDARD PLAN NO. A20B, DETAIL 27B
9. APPLY TYPE IV (L) ARROW PER CALTRANS STANDARD PLAN NO. A24A
10. PAINT TYPE IV (R) ARROW PER CALTRANS STANDARD PLAN NO. A24A
11. ~~APPLY TYPE VII (R) ARROW PER CALTRANS STANDARD PLAN NO. A24A~~
12. ~~APPLY TYPE VI (R) ARROW PER CALTRANS STANDARD PLAN NO. A24A~~
13. APPLY BIKE LANE PAVEMENT MARKINGS AS SHOWN PER CALTRANS STANDARD PLAN NO. A24D
14. APPLY BIKE LANE ARROW PER CALTRANS STANDARD PLAN NO. A24A
15. APPLY 8" SOLID WHITE LINE AT 45°, 20' O.C.
16. APPLY 8" SOLID WHITE CHEVRON MARKINGS, 20' O.C.
17. REMOVE EXISTING SIGN
18. INSTALL NEW SIGN
19. PROTECT EXISTING SIGN IN PLACE
20. RELOCATE EXISTING SIGN
21. PAINT LANELINE PER CALTRANS STANDARD PLAN NO. A20A, DETAIL 12
22. PAINT 8" SOLID WHITE CHANNELIZING LINE PER CALTRANS STANDARD PLAN NO.A20D, DETAIL 38
23. PAINT 6" SOLID WHITE BIKE LANE LINE PER CALTRANS STANDARD PLAN NO.A20D, DETAIL 39
24. PAINT 4" SOLID WHITE RIGHT EDGELINE PER CALTRANS STANDARD PLAN NO. A20B, DETAIL 27B
25. PAINT TYPE IV (L) ARROW PER CALTRANS STANDARD PLAN NO. A24A
26. PAINT BIKE LANE PAVEMENT MARKINGS AS SHOWN PER CALTRANS STANDARD PLAN NO. A24D
27. PAINT BIKE LANE ARROW PER CALTRANS STANDARD PLAN NO. A24A
28. PAINT 8" SOLID WHITE LINE AT 45°, 20' O.C.
29. PAINT 8" SOLID WHITE CHEVRON MARKINGS, 20' O.C.

REGISTERED PROFESSIONAL ENGINEER PAUL K. C. LAU No. 38388 EXP. DATE 12/31/15 CIVIL STATE OF CALIFORNIA

AS-BUILT
Paul Lau 06/10/14

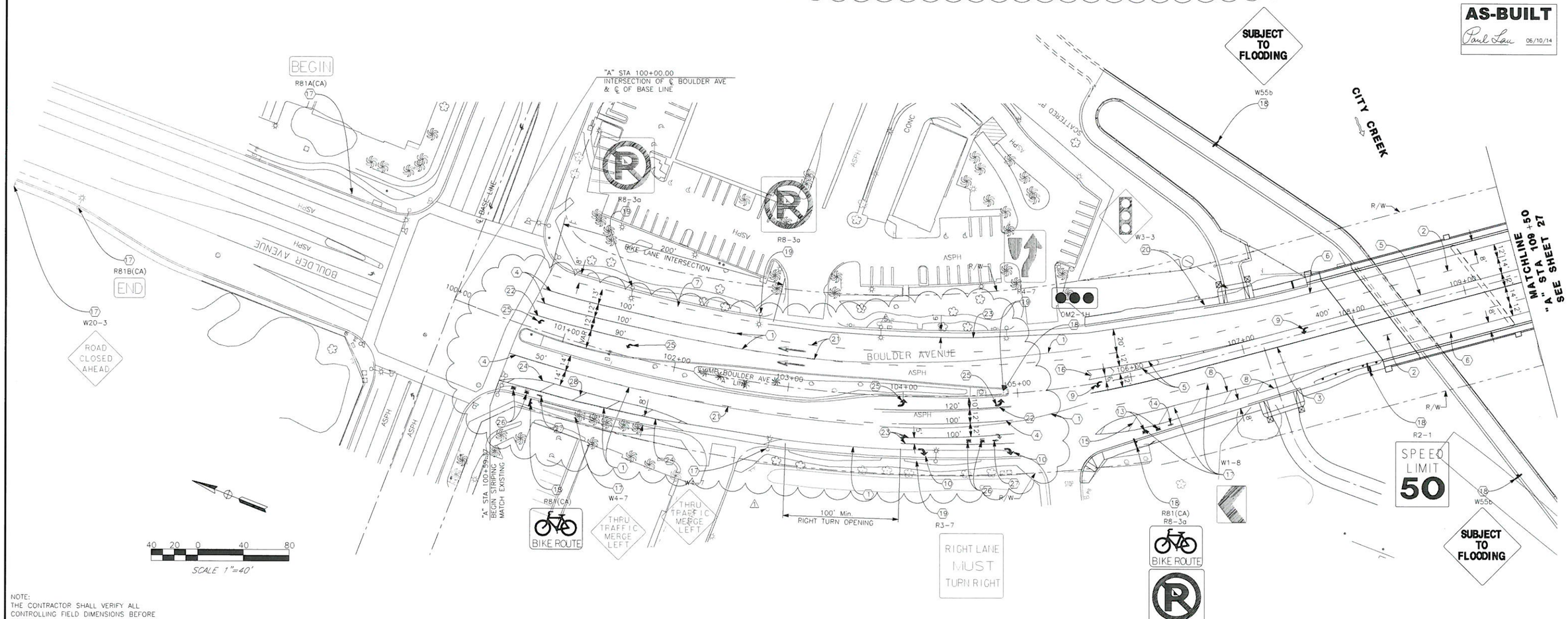

NOTE:
THE CONTRACTOR SHALL VERIFY ALL CONTROLLING FIELD DIMENSIONS BEFORE ORDERING OR FABRICATING ANY MATERIAL.

BENCHMARK
S.P.S.N. 00586
6"x 6' CONC POST WITH DRIVE PIN LOCATED 1 MILE S.E. ALONG S.F.RR FROM RR CROSSING AT BOULDER AVE., AT SOUTH END OF ST. HWY R/W FENCE, 23.5 FT. NORTH OF NORTH RAIL OF RR, 41 FT. EAST OF BOULDER AVE., NORTHBOUND TRAFFIC LANE, 12 FT. NORTH OF CULVERT HEADWALL.
ELEV. = 1353.459'

REGISTERED PROFESSIONAL ENGINEER EDWARD NG No. 46767 Exp. 6/30/13 CIVIL STATE OF CALIFORNIA

SUBMITTED BY: DATE: 10/4/11

PLANS PREPARED BY:
AECOM
901 VIA PIEMONTE, 5TH FLOOR
ONTARIO, CA 91764

REVISIONS

MARK	DESCRIPTION	APPR.	DATE
1	AS BUILT PLANS	PL	6/10/14

CITY OF HIGHLAND

DESIGNED BY	DRAWN BY	CHECKED BY
JY/NL	JY/NL	PL

SUBMITTED BY PAUL LAU
RECOMMENDED BY EDWARD NG 10/04/11
EDWARD NG DATE
R.C.E. 46767 EXP. 6-30-13

APPROVED BY 10.6.11
ERNEST WONG, CITY ENGINEER DATE
R.C.E. 37413 EXP. 6-30-12

BOULDER AVENUE BRIDGE OVER CITY CREEK (REPLACEMENT)

SIGNING AND STRIPING BOULDER AVE STA 100+00 TO 109+50

DRAWER NO.

SHEET 26 OF 37

SIGNING AND STRIPING NOTES

(2) APPLY LANELINE PER CALTRANS STANDARD PLAN NO. A20A, DETAIL 12

(3) APPLY MEDIAN ISLAND PER CALTRANS STANDARD PLAN NO. A20A, DETAIL 22

(5) APPLY 8" SOLID WHITE CHANNELIZING LINE PER CALTRANS STANDARD PLAN NO.A20D, DETAIL 38

(6) APPLY 6" SOLID WHITE BIKE LANE LINE PER CALTRANS STANDARD PLAN NO.A20D, DETAIL 39

(9) APPLY TYPE IV (L) ARROW PER CALTRANS STANDARD PLAN NO. A24A

(16) APPLY 8" SOLID WHITE CHEVRON MARKINGS, 20' O.C.

(18) INSTALL NEW SIGN

(21) PAINT LANELINE PER CALTRANS STANDARD PLAN NO. A20A, DETAIL 12

(23) PAINT 6" SOLID WHITE BIKE LANE LINE PER CALTRANS STANDARD PLAN NO.A20D, DETAIL 39

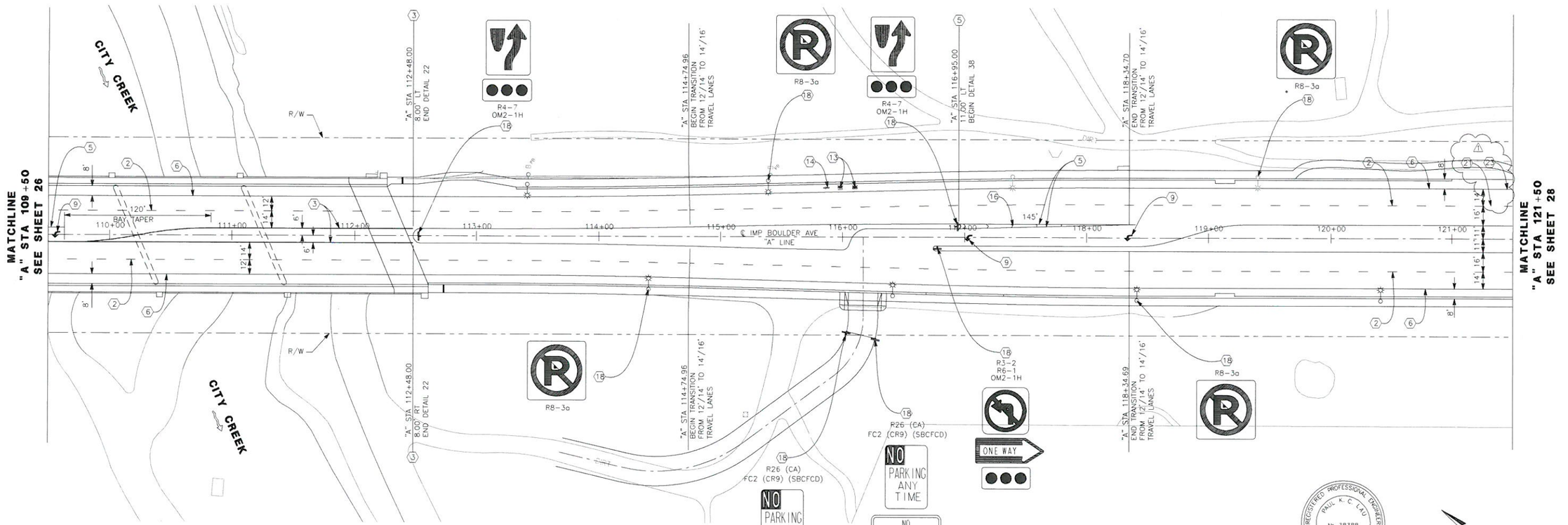

NOTE:
THE CONTRACTOR SHALL VERIFY ALL CONTROLLING FIELD DIMENSIONS BEFORE ORDERING OR FABRICATING ANY MATERIAL.

REGISTERED PROFESSIONAL ENGINEER PAUL K. C. LAU No. 38388 EXP. DATE 03/31/13 CIVIL STATE OF CALIFORNIA

AS-BUILT
Paul Lau 06/10/14

40 20 0 40 80
SCALE 1"=40'

BENCHMARK
S.P.S.N. 00586
6"x 6" CONC POST WITH DRIVE PIN LOCATED 1 MILE S.E. ALONG S.F.RR FROM RR CROSSING AT BOULDER AVE., AT SOUTH END OF ST. HWY R/W FENCE, 23.5 FT. NORTH OF NORTH RAIL OF RR, 41 FT. EAST OF BOULDER AVE., NORTHBOUND TRAFFIC LANE, 12 FT. NORTH OF CULVERT HEADWALL.
ELEV. = 1353.459'

REGISTERED PROFESSIONAL ENGINEER EDWARD NG No. 46767 Exp. 6/30/13 CIVIL STATE OF CALIFORNIA

SUBMITTED BY: DATE: 10/4/11

PLANS PREPARED BY:
AECOM
901 VIA PIEMONTE, 5TH FLOOR
ONTARIO, CA 91764

REVISIONS

MARK	DESCRIPTION	APPR.	DATE
1	AS BUILT PLANS	PL	6/10/14

CITY OF HIGHLAND

DESIGNED BY JY/NL | DRAWN BY JY/NL | CHECKED BY PL
SUBMITTED BY PAUL LAU
RECOMMENDED BY EDWARD NG 10/04/11
EDWARD NG DATE
R.C.E. 46767 EXP. 6-30-13
APPROVED BY Ernest Wong 10.6.11
ERNEST WONG, CITY ENGINEER DATE
R.C.E. 37413 EXP. 6-30-12

BOULDER AVENUE BRIDGE OVER CITY CREEK (REPLACEMENT)

SIGNING AND STRIPING BOULDER AVE STA 109+50 TO 121+50

DRAWER NO.

SHEET 27 OF 37

SIGNING AND STRIPING NOTES

2. APPLY LANELINE PER CALTRANS STANDARD PLAN NO. A20A, DETAIL 12
4. PAINT 4" SOLID WHITE LANE LINE
5. ~~APPLY 8" SOLID WHITE CHANNELIZING LINE PER CALTRANS STANDARD PLAN NO.A20D, DETAIL 38~~
6. ~~APPLY 6" SOLID WHITE BIKE LANE LINE PER CALTRANS STANDARD PLAN NO.A20D, DETAIL 39~~
9. ~~APPLY TYPE IV (L) ARROW PER CALTRANS STANDARD PLAN NO. A24A~~
10. ~~APPLY TYPE IV (R) ARROW PER CALTRANS STANDARD PLAN NO. A24A~~
7. PAINT 6" WHITE BIKE LANE INTERSECTION LINE PER CALTRANS STANDARD PLAN NO.A20D, DETAIL 39A
10. PAINT TYPE IV (R) ARROW PER CALTRANS STANDARD PLAN NO. A24A

13. ~~APPLY BIKE LANE PAVEMENT MARKINGS AS SHOWN PER CALTRANS STANDARD PLAN NO. A24D~~
14. ~~APPLY BIKE LANE ARROW PER CALTRANS STANDARD PLAN NO. A24A~~
15. ~~APPLY 8" SOLID WHITE CHEVRON MARKINGS, 20' O.C.~~
17. REMOVE EXISTING SIGN
18. INSTALL NEW SIGN
19. PROTECT EXISTING SIGN IN PLACE
21. PAINT LANELINE PER CALTRANS STANDARD PLAN NO. A20A, DETAIL 12
22. PAINT 8" SOLID WHITE CHANNELIZING LINE PER CALTRANS STANDARD PLAN NO.A20D, DETAIL 38
23. PAINT 6" SOLID WHITE BIKE LANE LINE PER CALTRANS STANDARD PLAN NO.A20D, DETAIL 39
25. PAINT TYPE IV (L) ARROW PER CALTRANS STANDARD PLAN NO. A24A
26. PAINT BIKE LANE PAVEMENT MARKINGS AS SHOWN PER CALTRANS STANDARD PLAN NO. A24D
27. PAINT BIKE LANE ARROW PER CALTRANS STANDARD PLAN NO. A24A
29. PAINT 8" SOLID WHITE CHEVRON MARKINGS, 20' O.C.

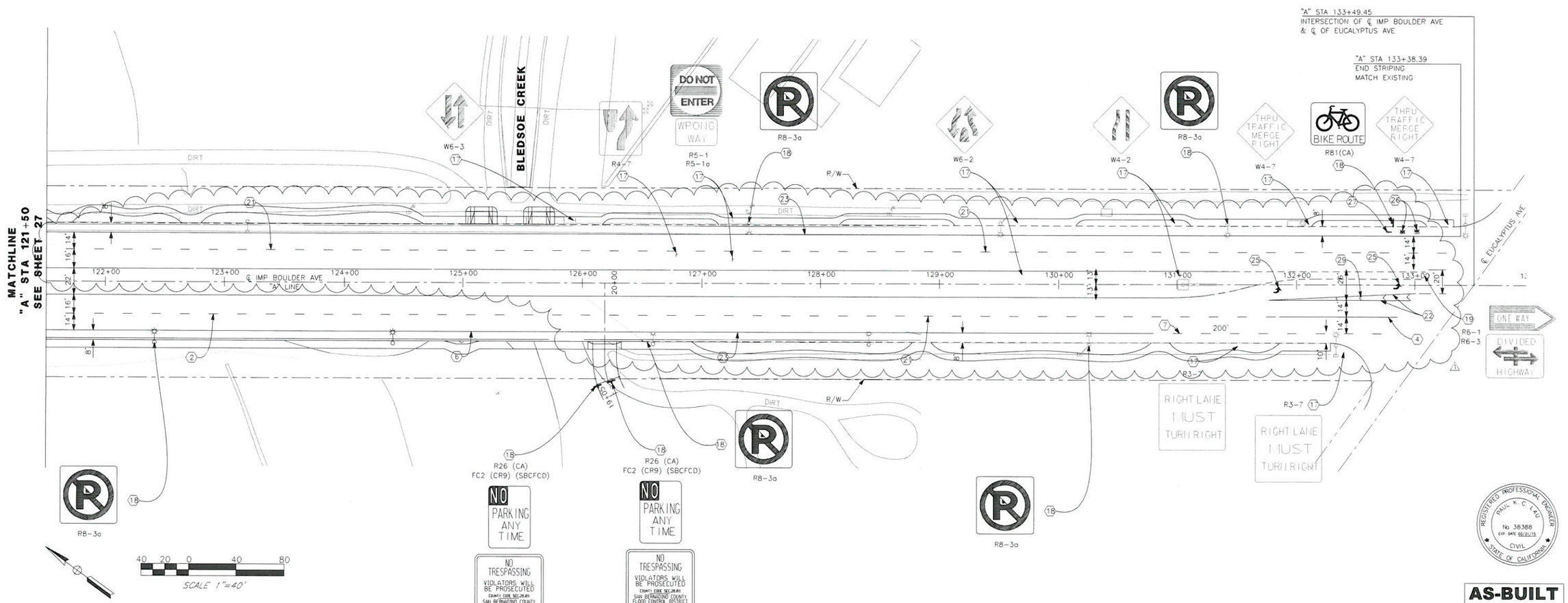

NOTE:
THE CONTRACTOR SHALL VERIFY ALL CONTROLLING FIELD DIMENSIONS BEFORE ORDERING OR FABRICATING ANY MATERIAL.

REGISTERED PROFESSIONAL ENGINEER PAUL K. C. LAU No. 38388 EXP. DATE 03/31/15 CIVIL STATE OF CALIFORNIA

AS-BUILT
Paul Lau 06/10/14

BENCHMARK
S.P.S.N. 00586
6"x 6" CONC POST WITH DRIVE PIN LOCATED 1 MILE S.E. ALONG S.F.RR FROM RR CROSSING AT BOULDER AVE., AT SOUTH END OF ST. HWY R/W FENCE, 23.5 FT. NORTH OF NORTH RAIL OF RR, 41 FT. EAST OF BOULDER AVE., NORTHBOUND TRAFFIC LANE, 12 FT. NORTH OF CULVERT HEADWALL.
ELEV. = 1353.459'

REGISTERED PROFESSIONAL ENGINEER EDWARD NG No. 46767 Exp. 6/30/13 CIVIL STATE OF CALIFORNIA

SUBMITTED BY: DATE: 10/4/11

PLANS PREPARED BY:
AECOM
901 VIA PIEMONTE, 5TH FLOOR
ONTARIO, CA 91764

REVISIONS			
1	AS BUILT PLANS	PL	6/10/14
MARK	DESCRIPTION	APPR.	DATE

CITY OF HIGHLAND

DESIGNED BY JY/NL | DRAWN BY JY/NL | CHECKED BY PL
SUBMITTED BY PAUL LAU
RECOMMENDED BY EDWARD NG 10/04/11
EDWARD NG DATE
R.C.E. 46767 EXP. 6-30-13

APPROVED BY Steve Wong 10.6.11
ERNEST WONG, CITY ENGINEER DATE
R.C.E. 37413 EXP. 6-30-12

BOULDER AVENUE BRIDGE OVER CITY CREEK (REPLACEMENT)

SIGNING AND STRIPING BOULDER AVE STA 121+50 TO 133+50

DRAWER NO.

SHEET 28 OF 37

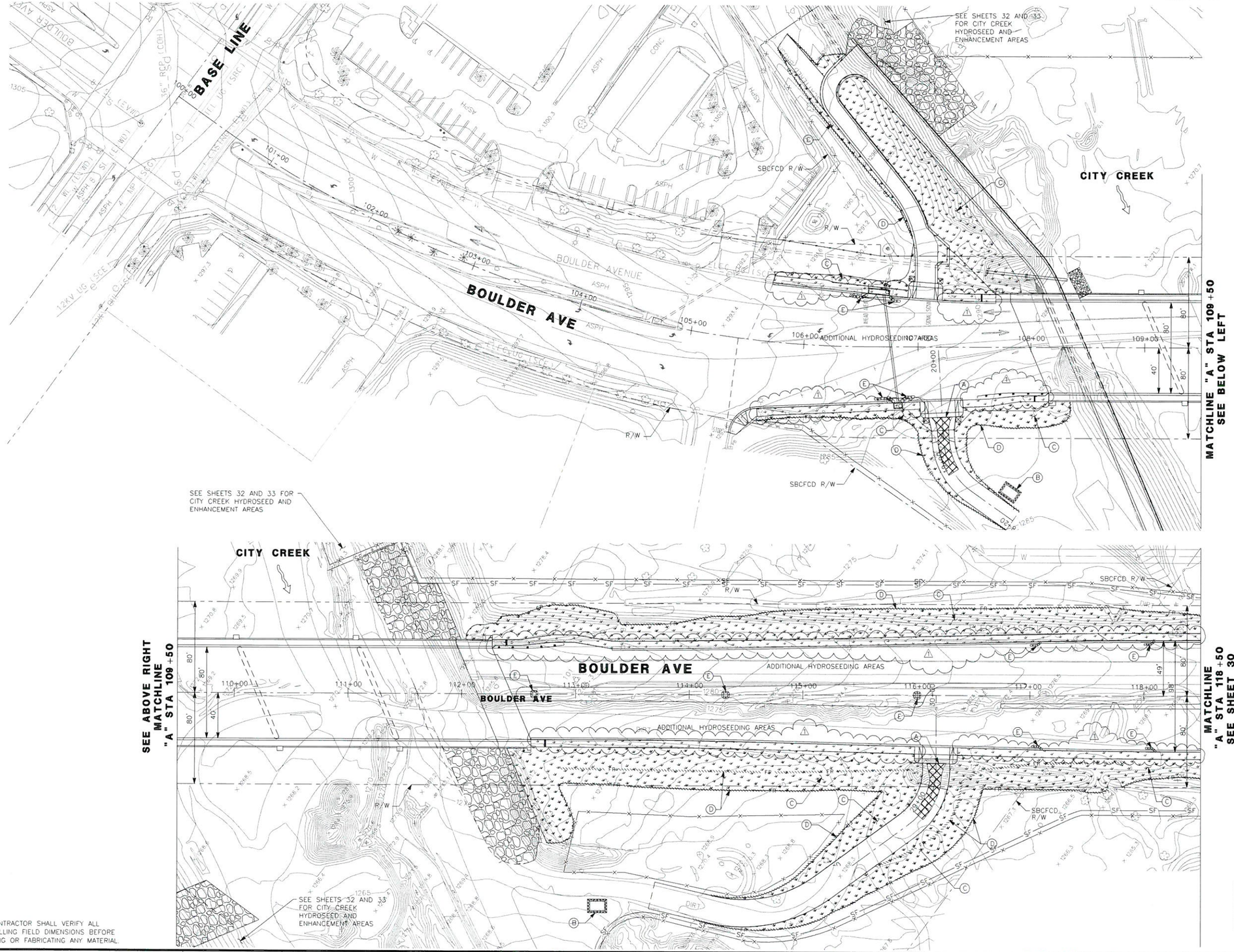

LEGEND

- GRAVEL BAG BERM
- FIBER ROLL
- TEMPORARY FENCING TYPE ESA
- TEMPORARY SILT FENCING
- HYDROSEED
- STABILIZED CONSTRUCTION ENTRANCE/EXIT

EROSION CONTROL NOTES

(A) CONSTRUCT TC-1 STABILIZED CONSTRUCTION ENTRANCE/EXIT PER 2009 CASQA BMP HANDBOOK.

(B) CONSTRUCT WM-8 TEMPORARY CONCRETE WASHOUT FACILITY PER 2009 CASQA BMP HANDBOOK.

(C) CONSTRUCT EC-4 HYDROSEEDING PER 2009 CASQA BMP HANDBOOK.

(D) CONSTRUCT SE-5 FIBER ROLLS PER 2009 CASQA BMP HANDBOOK.

(E) CONSTRUCT SE-10 STORM DRAIN INLET PROTECTION TYPE 3 (GRAVEL BAG BERM) PER 2009 CASQA BMP HANDBOOK. SEE DETAIL ON SHEET 31.

REGISTERED PROFESSIONAL ENGINEER PAUL K. C. LAU No 38388 EXP. DATE 03/31/15 CIVIL STATE OF CALIFORNIA

AS-BUILT
Paul Lau 06/10/14

20 0 40 80
SCALE 1"=40'

NOTE:
THE CONTRACTOR SHALL VERIFY ALL CONTROLLING FIELD DIMENSIONS BEFORE ORDERING OR FABRICATING ANY MATERIAL.

BENCHMARK
S.P.S.N. 00586
6'x 6' CONC POST WITH DRIVE PIN LOCATED 1 MILE S.E. ALONG S.F.RR FROM RR CROSSING AT BOULDER AVE., AT SOUTH END OF ST. HWY R/W FENCE, 23.5 FT. NORTH OF NORTH RAIL OF RR, 41 FT. EAST OF BOULDER AVE., NORTHBOUND TRAFFIC LANE, 12 FT. NORTH OF CULVERT HEADWALL.
ELEV. = 1353.459'

REGISTERED PROFESSIONAL ENGINEER EDWARD NG No 46767 Exp. 6/30/13 CIVIL STATE OF CALIFORNIA

SUBMITTED BY: DATE: 10/4/11

PLANS PREPARED BY:
AECOM
901 VIA PIEMONTE, 5TH FLOOR
ONTARIO, CA 91764

REVISIONS

MARK	DESCRIPTION	APPR.	DATE
1	AS BUILT PLANS	PL	6/10/14

CITY OF HIGHLAND

DESIGNED BY JY/NL | DRAWN BY JY/NL | CHECKED BY PL
SUBMITTED BY PAUL LAU
RECOMMENDED BY EDWARD NG 10/04/11
EDWARD NG DATE
R.C.E. 46767 EXP. 6-30-13
APPROVED BY 10.6.11
ERNEST WONG, CITY ENGINEER DATE
R.C.E. 37413 EXP. 6-30-12

BOULDER AVENUE BRIDGE OVER CITY CREEK (REPLACEMENT)

EROSION CONTROL PLAN BOULDER AVE STA 100+00 TO 118+50

DRAWER NO.

SHEET 29 OF 37

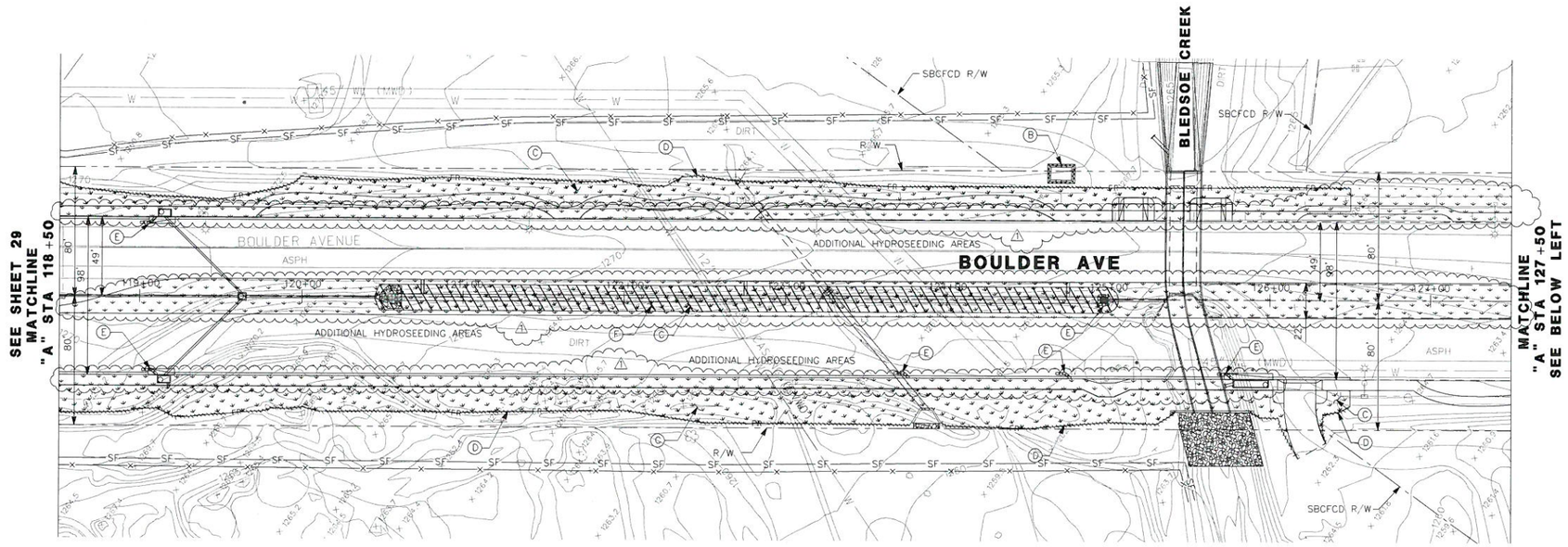

LEGEND

- GRAVEL BAG BERM
- FIBER ROLL
- TEMPORARY FENCING TYPE ESA
- TEMPORARY SILT FENCING
- HYDROSEED
- EROSION CONTROL BLANKET

EROSION CONTROL NOTES

(B) CONSTRUCT WM-8 TEMPORARY CONCRETE WASHOUT FACILITY PER 2009 CASQA BMP HANDBOOK.

(C) CONSTRUCT EC-4 HYDROSEEDING PER 2009 CASQA BMP HANDBOOK.

(D) CONSTRUCT SE-5 FIBER ROLLS PER 2009 CASQA BMP HANDBOOK.

(E) CONSTRUCT SE-10 STORM DRAIN INLET PROTECTION TYPE 3 (GRAVEL BAG BERM) PER 2009 CASQA BMP HANDBOOK. SEE DETAIL ON SHEET 31.

(F) CONSTRUCT EC-7 EROSION CONTROL BLANKET PER 2009 CASQA BMP HANDBOOK.

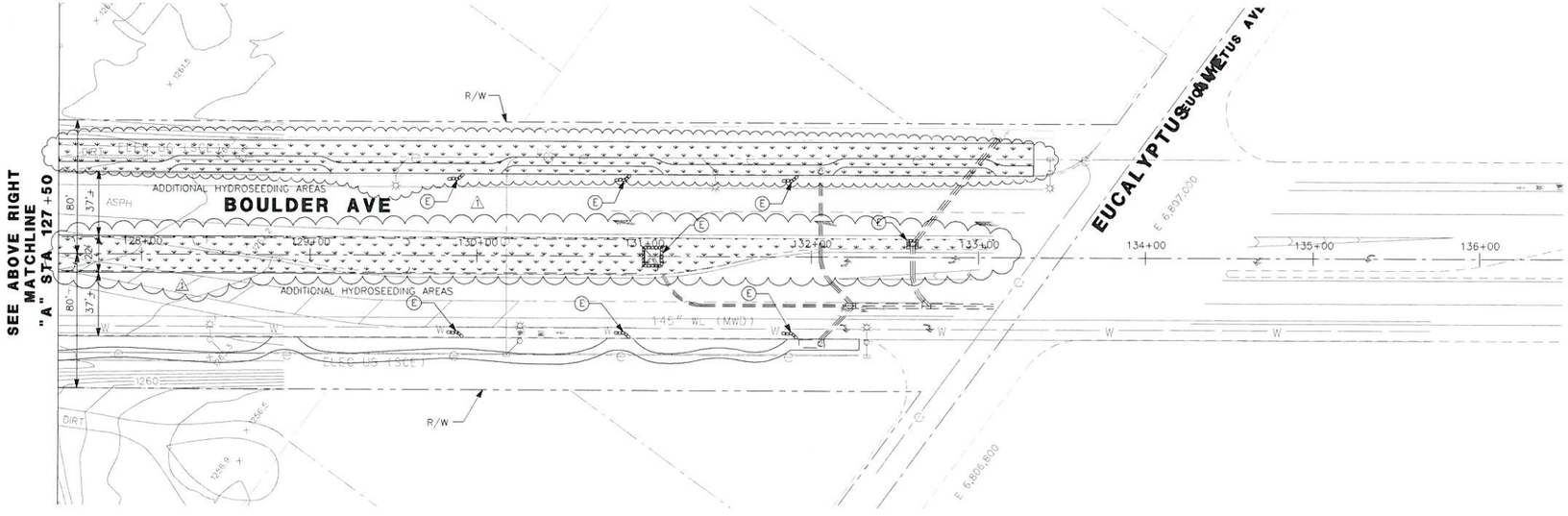

AS-BUILT
Paul Lau 06/10/14

NOTE:
THE CONTRACTOR SHALL VERIFY ALL CONTROLLING FIELD DIMENSIONS BEFORE ORDERING OR FABRICATING ANY MATERIAL.

BENCHMARK
S.P.S.N. 00586
6'x 6' CONC POST WITH DRIVE PIN LOCATED 1 MILE S.E. ALONG S.F.RR FROM RR CROSSING AT BOULDER AVE., AT SOUTH END OF ST. HWY R/W FENCE, 23.5 FT. NORTH OF NORTH RAIL OF RR, 41 FT. EAST OF BOULDER AVE., NORTHBOUND TRAFFIC LANE, 12 FT. NORTH OF CULVERT HEADWALL.
ELEV. = 1353.459'

REGISTERED PROFESSIONAL ENGINEER
EDWARD NG
No. 46767
Exp. 6/30/13
CIVIL
STATE OF CALIFORNIA

SUBMITTED BY: Ed
DATE: 10/4/11

PLANS PREPARED BY:
AECOM
901 VIA PIEMONTE, 5TH FLOOR
ONTARIO, CA 91764

REVISIONS

MARK	DESCRIPTION	APPR.	DATE
1	AS BUILT PLANS	PL	6/10/14

CITY OF HIGHLAND

DESIGNED BY JY/NL | DRAWN BY JY/NL | CHECKED BY PL
SUBMITTED BY PAUL LAU
RECOMMENDED BY EDWARD NG 10/04/11
EDWARD NG DATE
R.C.E. 46767 EXP. 6-30-13
APPROVED BY Ernest Wong 10.6.11
ERNEST WONG, CITY ENGINEER DATE
R.C.E. 37413 EXP. 6-30-12

BOULDER AVENUE BRIDGE OVER CITY CREEK (REPLACEMENT)

EROSION CONTROL PLAN BOULDER AVE STA 118+50 TO 133+50

DRAWER NO.

SHEET 30 OF 37

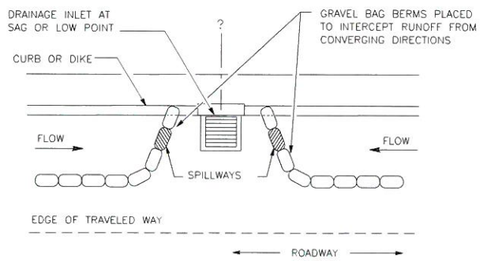

PLAN

CONFIGURATION FOR SAG POINT INLET
(GRAVEL BAG BERM)

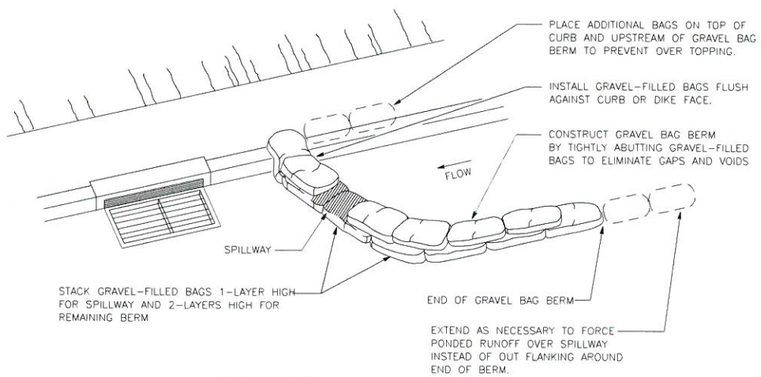

PERSPECTIVE

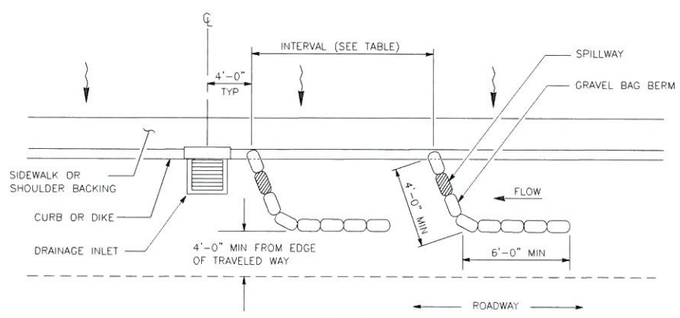

PLAN

TEMPORARY DRAINAGE
INLET PROTECTION (TYPE 3A)
(GRAVEL BAG BERM)

GRAVEL BAG BERM (TYPE 3A) SPACING TABLE

SLOPE OF ROADWAY (PERCENT)	1 TO 3.9	4 TO 5.9	6 TO 7.9	8 TO 10	10+
INTERVAL BETWEEN BERM	100'	75'	50'	25'	12'

FOR SLOPE OF LESS THAN 1%, INSTALL BARRIERS ONLY IF EROSION/SEDIMENT IS PREVALENT

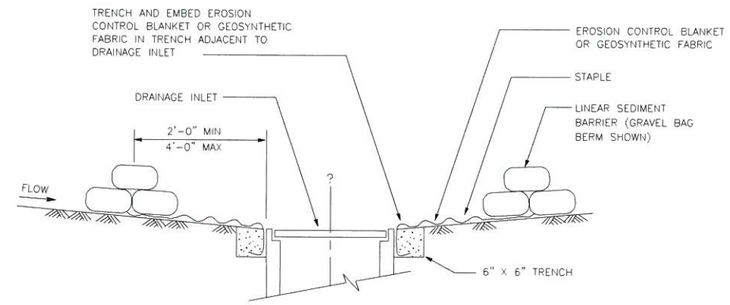

SECTION A-A

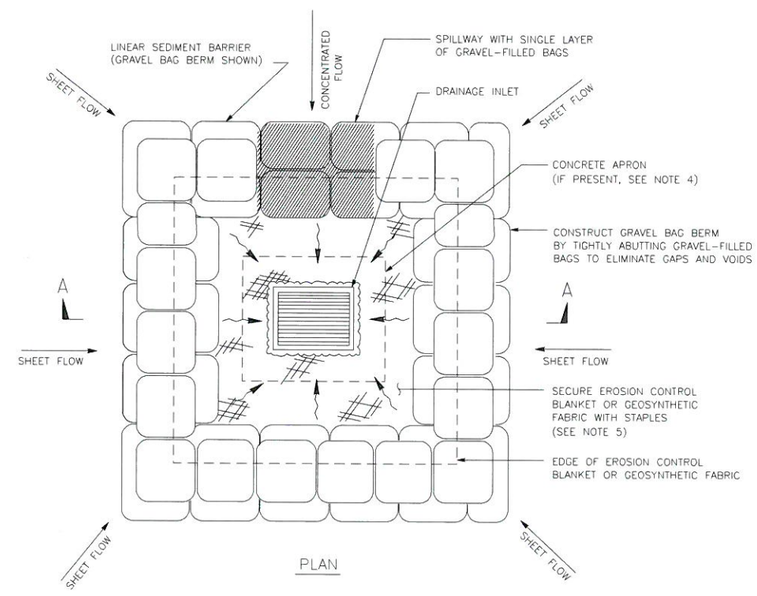

PLAN

TEMPORARY DRAINAGE
INLET PROTECTION (TYPE 3B)

NOTES:

1. PLACE SAFETY CONES ADJACENT TO DRAINAGE INLET PROTECTION.
2. DIMENSIONS MAY VARY TO FIT FIELD CONDITIONS.
3. INSTALL A MINIMUM OF 3 GRAVEL BAG BERMS UPSTREAM OF EACH DRAINAGE INLET TO BE PROTECTED.
4. POSITION EROSION CONTROL BLANKET OR GEOSYNTHETIC FABRIC AT EDGE OF CONCRETE APRON AND SECURE IN TRENCH.
5. EROSION CONTROL BLANKET OR GEOSYNTHETIC FABRIC IS NOT REQUIRED IF THE AREA ADJACENT TO THE DRAINAGE INLET IS VEGETATED OR PAVED.

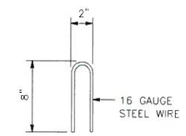

STAPLE DETAIL

REGISTERED PROFESSIONAL ENGINEER
PAUL K. C. LAU
No 38388
EXP. DATE 03/31/15
CIVIL
STATE OF CALIFORNIA

AS-BUILT
Per Original Plan
Paul Lau 06/10/14
NO AS-BUILT CHANGES

NOTE:
THE CONTRACTOR SHALL VERIFY ALL CONTROLLING FIELD DIMENSIONS BEFORE ORDERING OR FABRICATING ANY MATERIAL.

BENCHMARK
S.P.S.N. 00586
6'x 6' CONC POST WITH DRIVE PIN LOCATED 1 MILE S.E. ALONG S.F.RR FROM RR CROSSING AT BOULDER AVE., AT SOUTH END OF ST. HWY R/W FENCE, 23.5 FT. NORTH OF NORTH RAIL OF RR, 41 FT. EAST OF BOULDER AVE., NORTHBOUND TRAFFIC LANE, 12 FT. NORTH OF CULVERT HEADWALL.
ELEV. = 1353.459'

REGISTERED PROFESSIONAL ENGINEER
EDWARD NG
No. 46767
Exp. 6/30/13
CIVIL
STATE OF CALIFORNIA

SUBMITTED BY:
DATE: 10/4/11

PLANS PREPARED BY:
AECOM
901 VIA PIEMONTE, 5TH FLOOR
ONTARIO, CA 91764

REVISIONS

MARK	DESCRIPTION	APPR.	DATE

CITY OF HIGHLAND

DESIGNED BY JY/NL | DRAWN BY JY/NL | CHECKED BY PL
SUBMITTED BY PAUL LAU
RECOMMENDED BY EDWARD NG 10/04/11
EDWARD NG DATE
R.C.E. 46767 EXP. 6-30-13

APPROVED BY
Ernest Wong 10.6.11
ERNEST WONG, CITY ENGINEER DATE
R.C.E. 37413 EXP. 6-30-12

BOULDER AVENUE BRIDGE OVER CITY CREEK (REPLACEMENT)

EROSION CONTROL PLAN DETAILS

DRAWER NO.

SHEET 31 OF 37

EROSION CONTROL NOTES

(C) CONSTRUCT EC-4 HYDROSEEDING PER 2009 CASQA BMP HANDBOOK.

LEGEND

- PROJECT BOUNDARY/APE LIMIT
- EXTENT OF USACE JURISDICTION
- EXTENT OF CDFG JURISDICTION
- HYDROSEED
- ROCK SLOPE PROTECTION

REGISTERED PROFESSIONAL ENGINEER PAUL K. C. LAU No. 38388 EXP. DATE 03/31/13 CIVIL STATE OF CALIFORNIA

AS-BUILT
Per Original Plan
Paul Lau 06/10/14

NO AS-BUILT CHANGES

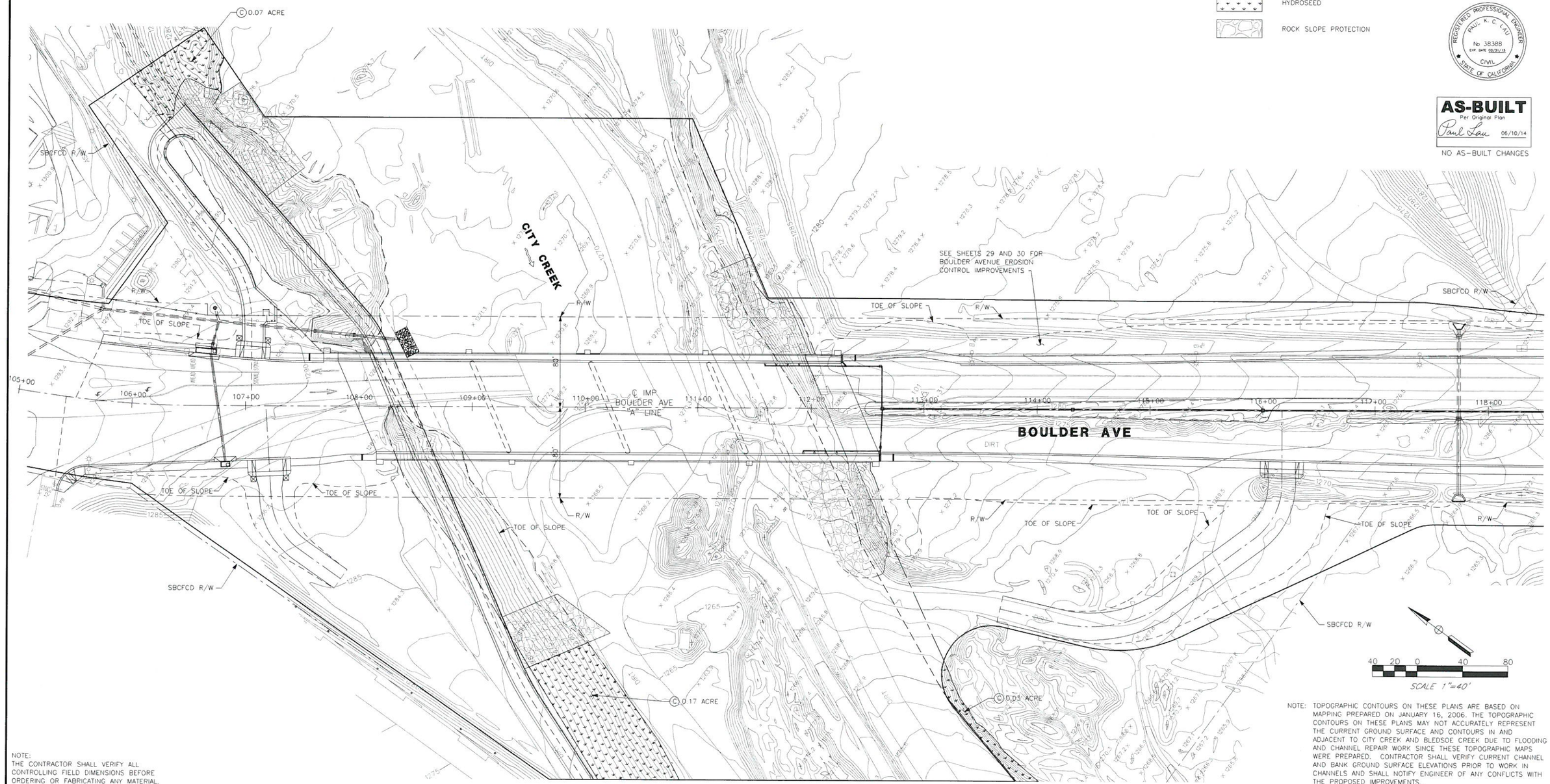

NOTE:
THE CONTRACTOR SHALL VERIFY ALL CONTROLLING FIELD DIMENSIONS BEFORE ORDERING OR FABRICATING ANY MATERIAL.

NOTE: TOPOGRAPHIC CONTOURS ON THESE PLANS ARE BASED ON MAPPING PREPARED ON JANUARY 16, 2006. THE TOPOGRAPHIC CONTOURS ON THESE PLANS MAY NOT ACCURATELY REPRESENT THE CURRENT GROUND SURFACE AND CONTOURS IN AND ADJACENT TO CITY CREEK AND BLEDSOE CREEK DUE TO FLOODING AND CHANNEL REPAIR WORK SINCE THESE TOPOGRAPHIC MAPS WERE PREPARED. CONTRACTOR SHALL VERIFY CURRENT CHANNEL AND BANK GROUND SURFACE ELEVATIONS PRIOR TO WORK IN CHANNELS AND SHALL NOTIFY ENGINEER OF ANY CONFLICTS WITH THE PROPOSED IMPROVEMENTS.

BENCHMARK

S.P.S.N. 00586
6'x 6' CONC POST WITH DRIVE PIN LOCATED 1 MILE S.E. ALONG S.F.RR FROM RR CROSSING AT BOULDER AVE., AT SOUTH END OF ST. HWY R/W FENCE, 23.5 FT. NORTH OF NORTH RAIL OF RR, 41 FT. EAST OF BOULDER AVE., NORTHBOUND TRAFFIC LANE, 12 FT. NORTH OF CULVERT HEADWALL.
ELEV. = 1353.459'

REGISTERED PROFESSIONAL ENGINEER EDWARD NG No. 46767 Exp. 6/30/13 CIVIL STATE OF CALIFORNIA

SUBMITTED BY: DATE: 10/4/11

PLANS PREPARED BY:

AECOM
901 VIA PIEMONTE, 5TH FLOOR
ONTARIO, CA 91764

REVISIONS			
MARK	DESCRIPTION	APPR.	DATE

CITY OF HIGHLAND

DESIGNED BY	DRAWN BY	CHECKED BY
JY/NL	JY/NL	PL

SUBMITTED BY: PAUL LAU
RECOMMENDED BY: EDWARD NG 10/04/11
EDWARD NG DATE
R.C.E. 46767 EXP. 6-30-13

APPROVED BY: Steve Wong 10.6.11
ERNEST WONG, CITY ENGINEER DATE
R.C.E. 37413 EXP. 6-30-12

BOULDER AVENUE BRIDGE OVER CITY CREEK (REPLACEMENT)

CITY CREEK HYDROSEED AREAS

DRAWER NO.

SHEET 32 OF 37

HABITAT ENHANCEMENT NOTES

1. INSTALL CORNER MARKER TYPE L-2 PER CALTRANS 2006 STANDARD PLAN NO. A37A
2. CONDUCT HABITAT ENHANCEMENTS PER ENVIRONMENTAL SPECIFICATIONS

LEGEND

- PROJECT BOUNDARY/APE LIMIT
- NON-NATIVE INVASIVE REMOVAL
- CORNER MARKER TYPE L-2 PER CALTRANS 2006 STANDARD PLAN NO. A73A

NOTE: AREAS DELINEATED ON THESE PLANS ARE APPROXIMATE. FINAL BOUNDARIES ARE TO BE DETERMINED BY THE BIOLOGIST.

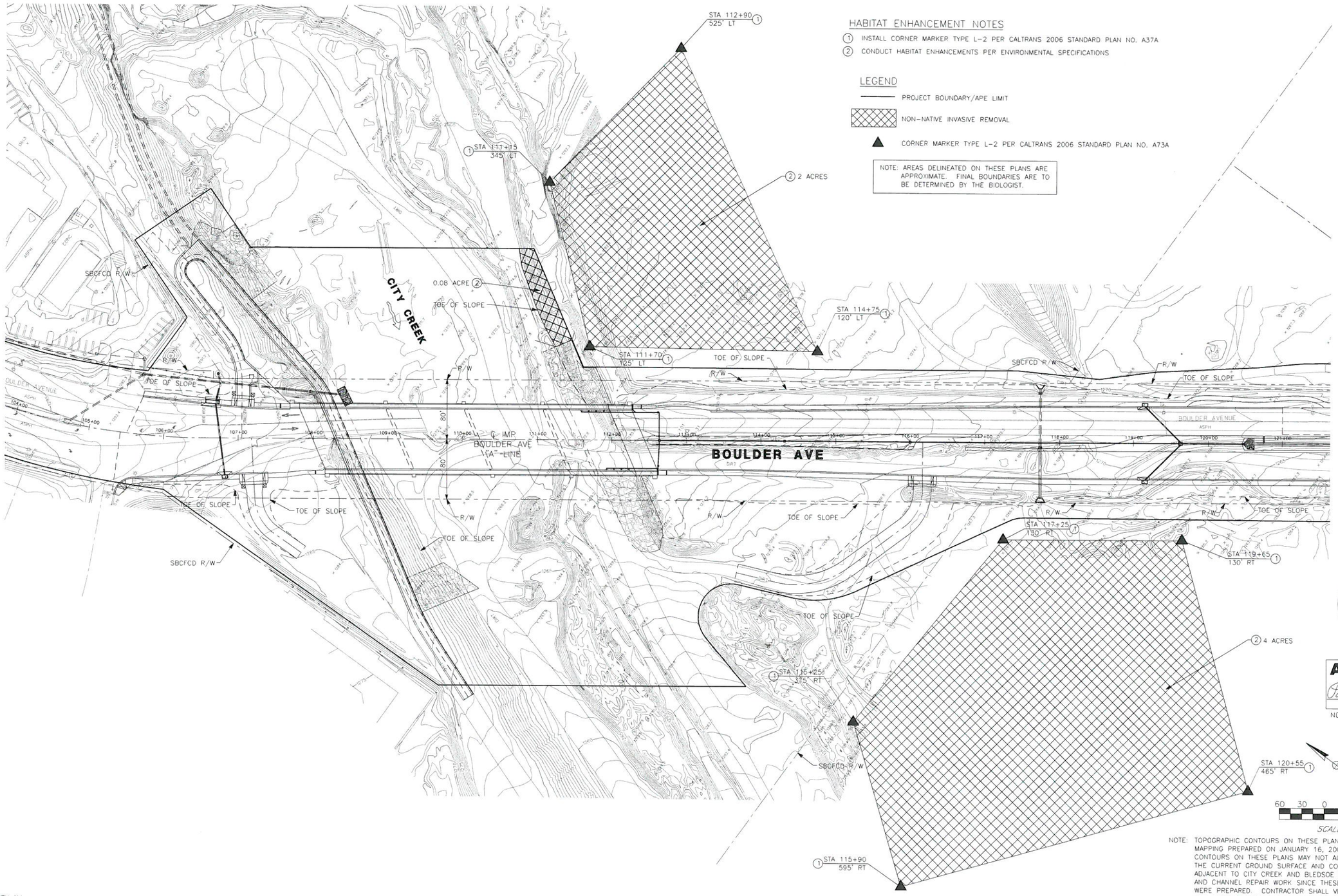

REGISTERED PROFESSIONAL ENGINEER
PAUL K. C. LAU
No 38388
EXP. DATE 03/31/13
CIVIL
STATE OF CALIFORNIA

AS-BUILT
Per Original Plan
Paul Lau 06/10/14
NO AS-BUILT CHANGES

NOTE: TOPOGRAPHIC CONTOURS ON THESE PLANS ARE BASED ON MAPPING PREPARED ON JANUARY 16, 2006. THE TOPOGRAPHIC CONTOURS ON THESE PLANS MAY NOT ACCURATELY REPRESENT THE CURRENT GROUND SURFACE AND CONTOURS IN AND ADJACENT TO CITY CREEK AND BLEDSOE CREEK DUE TO FLOODING AND CHANNEL REPAIR WORK SINCE THESE TOPOGRAPHIC MAPS WERE PREPARED. CONTRACTOR SHALL VERIFY CURRENT CHANNEL AND BANK GROUND SURFACE ELEVATIONS PRIOR TO WORK IN CHANNELS AND SHALL NOTIFY ENGINEER OF ANY CONFLICTS WITH THE PROPOSED IMPROVEMENTS.

NOTE:
THE CONTRACTOR SHALL VERIFY ALL CONTROLLING FIELD DIMENSIONS BEFORE ORDERING OR FABRICATING ANY MATERIAL.

BENCHMARK
S.P.S.N. 00586
6"x 6" CONC POST WITH DRIVE PIN LOCATED 1 MILE S.E. ALONG S.F.RR FROM RR CROSSING AT BOULDER AVE., AT SOUTH END OF ST. HWY R/W FENCE, 23.5 FT. NORTH OF NORTH RAIL OF RR, 41 FT. EAST OF BOULDER AVE., NORTHBOUND TRAFFIC LANE, 12 FT. NORTH OF CULVERT HEADWALL. ELEV. = 1353.459'

REGISTERED PROFESSIONAL ENGINEER
EDWARD NG
No. 46767
Exp. 6/30/13
CIVIL
STATE OF CALIFORNIA

SUBMITTED BY: Ed Ng DATE: 10/4/11

PLANS PREPARED BY:
AECOM
901 VIA PIEMONTE, 5TH FLOOR
ONTARIO, CA 91764

REVISIONS			
MARK	DESCRIPTION	APPR.	DATE

CITY OF HIGHLAND

DESIGNED BY	DRAWN BY	CHECKED BY
JY/NL	JY/NL	PL

SUBMITTED BY: PAUL LAU
RECOMMENDED BY: EDWARD NG 10/04/11
EDWARD NG DATE
R.C.E. 46767 EXP. 6-30-13

APPROVED BY: Ernest Wong 10.6.11
ERNEST WONG, CITY ENGINEER DATE
R.C.E. 37413 EXP. 6-30-12

BOULDER AVENUE BRIDGE OVER CITY CREEK (REPLACEMENT)

CITY CREEK ALLUVIAL FAN TERRACE ENHANCEMENT AREAS

DRAWER NO.

SHEET 33 OF 37

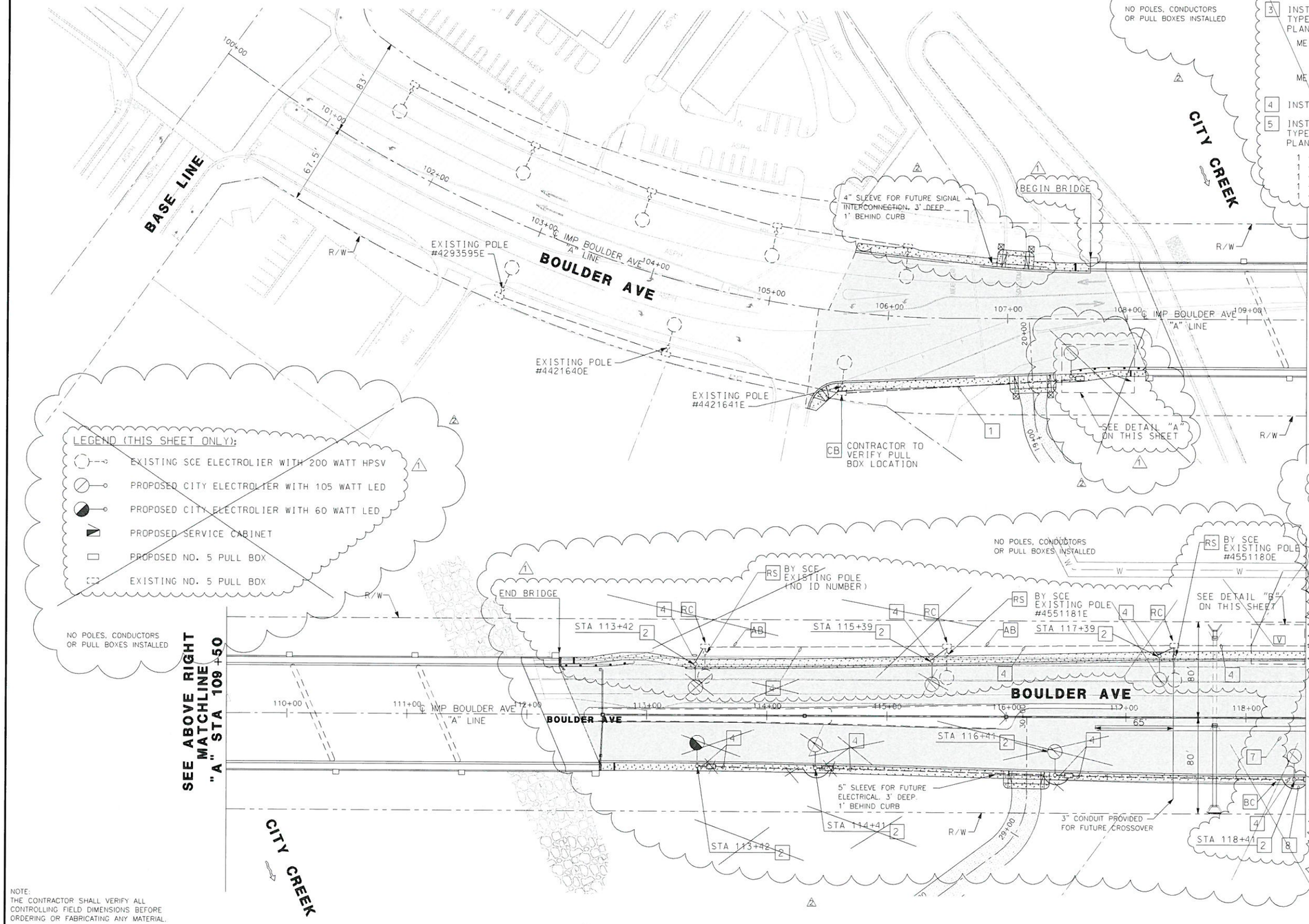

CONSTRUCTION NOTES: (THIS SHEET ONLY)

1. INSTALL 3" CONDUIT WITH PULL ROPE. CONDUCTORS TO BE INSTALLED BY SCE.
2. INSTALL NEW ELECTROLIER.
3. INSTALL TYPE III-CF SERVICE EQUIPMENT ENCLOSURE WITH TYPE V PHOTOELECTRIC CONTROL PER CALTRANS STANDARD PLAN ES-2E. SERVICE ADDRESS: _____ BOULDER AVENUE.
   METER No. 1: 1 - 100 A. 240 V. 2P. CB (MAIN BREAKER)
   1 - 30 A. 240 V. 2P. CB (FOR BOULDER AVE LIGHTING)
   1 - 15 A. 120 V. 1P. CB (FOR LIGHTING CONTROL)
   METER No. 2: 1 - 100 A. 240 V. 2P. CB (MAIN BREAKER)
   1 - 20 A. 120 V. 2P. CB (FOR IRRIGATION)
4. INSTALL 2" CONDUIT WITH 2#8.
5. INSTALL TYPE III-BF SERVICE EQUIPMENT ENCLOSURE WITH TYPE V PHOTOELECTRIC CONTROL PER CALTRANS STANDARD PLAN ES-2E. SERVICE ADDRESS: 7434 1/2 BOULDER AVENUE.
   1 - 100 A. 240 V. 2P. CB (MAIN BREAKER)
   1 - 30 A. 240 V. 2P. CB (FOR BRIDGE LIGHTING)
   1 - 30 A. 240 V. 2P. CB (FOR PENDANT SOFFIT LIGHTING)
   1 - 30 A. 240 V. 2P. CB (FOR TRAIL LIGHTING)
   1 - 15 A. 120 V. 1P. CB (FOR LIGHTING CONTROL)
6. INSTALL 2" CONDUIT WITH 8#8.
7. EXISTING 2-5" CONDUIT, m+. INSTALL 2#8 (LTG) AND 2#12 (IRR).
8. INSTALL 2" CONDUIT, 2#8 (LTG), 2#12 (IRR).
9. ALL NEW PULL BOXES SHALL BE NO. 5 UNLESS OTHERWISE NOTED.

GENERAL NOTE: (SHEET 34R1 AND 35R1)

1. CITY ELECTROLIER SHALL BE ____W LED STREET LIGHT WITH A COBRA HEAD (CUT-OFF) FLAT GLASS LUMINIARE WITH A 6-FOOT MAST ARM MOUNTED ON A 28-FOOT NATURAL GRAY MARBLELITE POLE WITH AN ANTI-GRAFFITI COATING.

FOR CONTINUATION SEE SHEET 36R1 (BRIDGE LIGHTING PLAN)

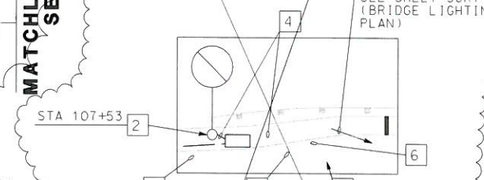

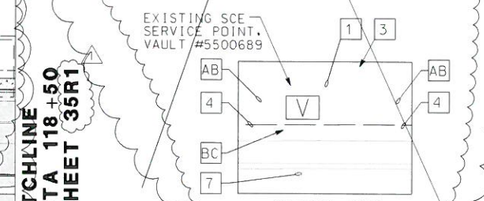

NOTE:
THE CONTRACTOR SHALL VERIFY ALL CONTROLLING FIELD DIMENSIONS BEFORE ORDERING OR FABRICATING ANY MATERIAL.

REGISTERED PROFESSIONAL ENGINEER PAUL K. C. LAU No. 38388 EXP. DATE 03/31/15 CIVIL STATE OF CALIFORNIA

AS-BUILT Paul Lau 06/10/14

SCALE 1"=40'

BENCHMARK
S.P.S.N. 00586
6'x 6' CONC POST WITH DRIVE PIN LOCATED 1 MILE S.E. ALONG S.F.RR FROM RR CROSSING AT BOULDER AVE., AT SOUTH END OF ST. HWY R/W FENCE, 23.5 FT. NORTH OF NORTH RAIL OF RR, 41 FT. EAST OF BOULDER AVE., NORTHBOUND TRAFFIC LANE, 12 FT. NORTH OF CULVERT HEADWALL.
ELEV. = 1353.459'

SUBMITTED BY: DATE:

PLANS PREPARED BY:
LIN Consulting, Inc.
Traffic, Civil and Electrical Consulting Engineers
1432 EDINGER AVENUE, #230
TUSTIN, CA 92780-6293
TEL: (714)258-8411

REVISIONS			
1	CCO#3 - BOULDER AVE LIGHTING		
2	AS BUILT PLANS	PL	6/10/14
MARK	DESCRIPTION	APPR.	DATE

CITY OF HIGHLAND

DESIGNED BY GH | DRAWN BY RMW | CHECKED BY GH
SUBMITTED BY GARY HANSEN
RECOMMENDED BY GARY HANSEN
GARY HANSEN DATE R.C.E. 26543 EXP. 3-31-14
APPROVED BY Ernest Wong 10.6.11
ERNEST WONG, CITY ENGINEER DATE R.C.E. 37413 EXP. 6-30-12

BOULDER AVENUE BRIDGE OVER CITY CREEK (REPLACEMENT)

LIGHTING PLAN BOULDER AVE STA 100+00 TO 118+50

DRAWER NO.

SHEET 34R1 OF 37

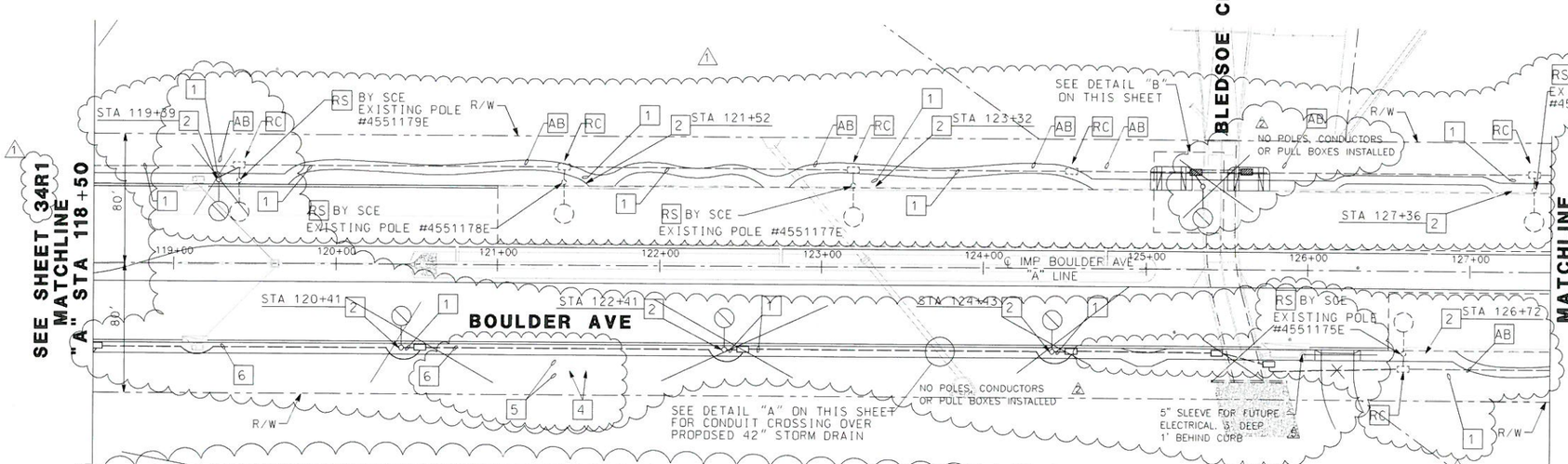

LEGEND (THIS SHEET ONLY):

- EXISTING SCE ELECTROLIER WITH 200 WATT HPSV
- PROPOSED CITY ELECTROLIER WITH 65 WATT LED
- PROPOSED SERVICE CABINET
- PROPOSED NO. 5 PULL BOX
- EXISTING NO. 5 PULL BOX

NO POLES, CONDUCTORS OR PULL BOXES INSTALLED

CONSTRUCTION NOTES: (THIS SHEET ONLY)

1. INSTALL 2" CONDUIT. 2#8.
2. INSTALL NEW ELECTROLIER.
3. INSTALL TYPE III-BF SERVICE EQUIPMENT ENCLOSURE WITH TYPE V PHOTOELECTRIC CONTROL PER CALTRANS STANDARD PLAN ES-2E. SERVICE ADDRESS: _____BOULDER AVENUE.
   1 - 100 A. 240 V. 2P. CB (MAIN BREAKER)
   1 - 30 A. 240 V. 2P. CB (FOR BOULDER AVE LIGHTING)
   1 - 15 A. 120 V. 1P. CB (FOR LIGHTING CONTROL)
4. PROPOSED IRRIGATION CONTROLLERS (SEE IRRIGATION PLAN FOR DETAILS).
5. INSTALL 2" CONDUIT. 2#12.
6. INSTALL 2" CONDUIT. 2#8 (LTG). 2#14 (IRR).
7. ALL NEW PULL BOXES SHALL BE NO. 5 UNLESS OTHERWISE NOTED.

NO POLES, CONDUCTORS OR PULL BOXES INSTALLED

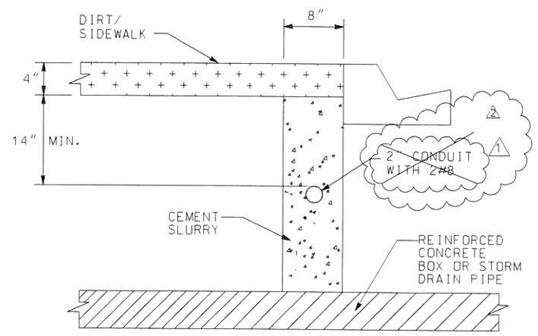

DETAIL "A"
NO SCALE

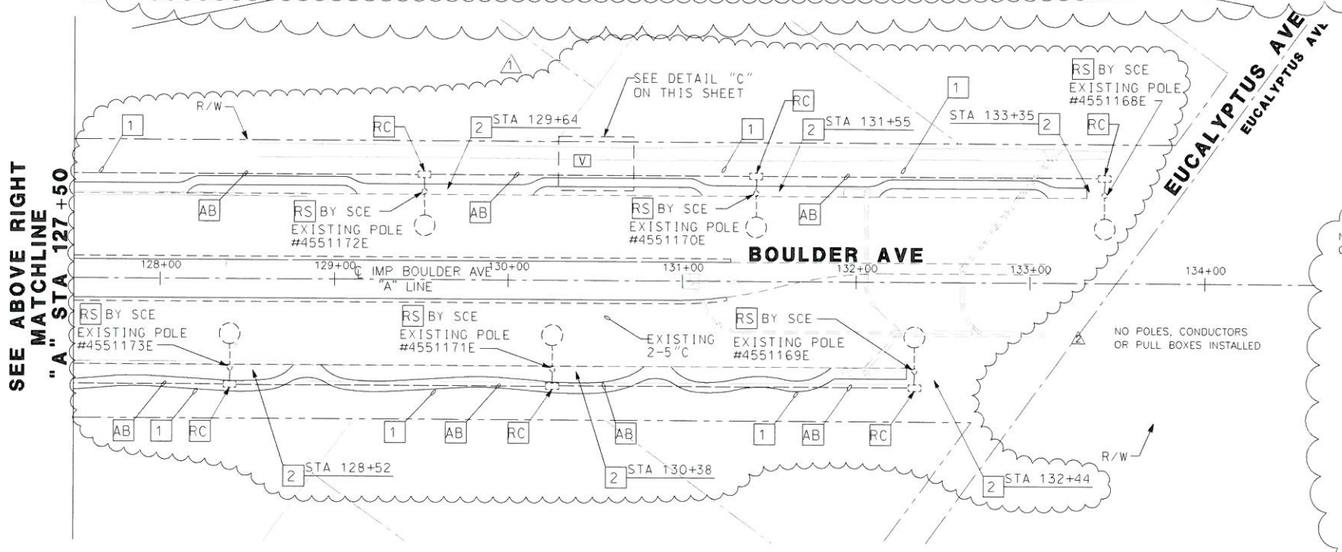

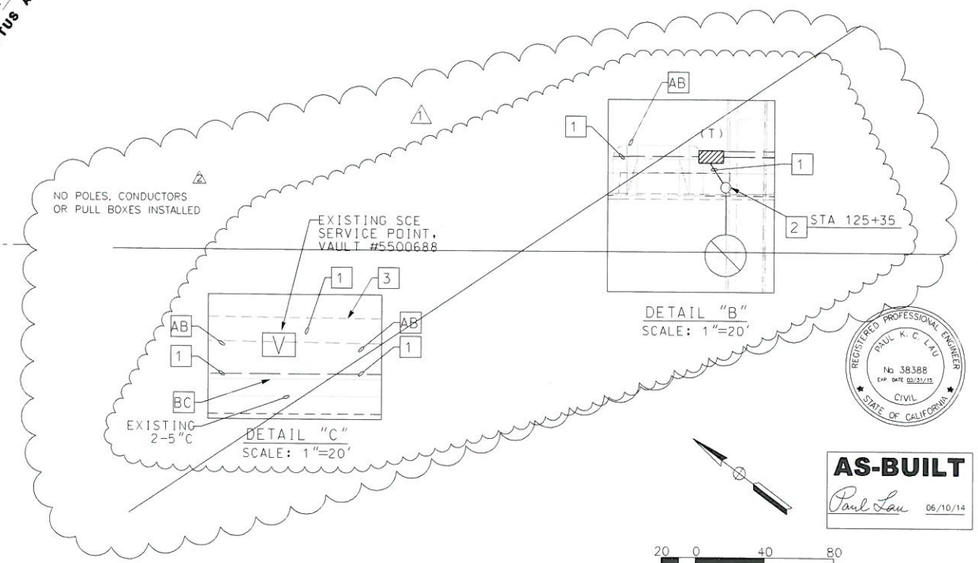

REGISTERED PROFESSIONAL ENGINEER
PAUL K. C. LAU
No 38388
EXP DATE 03/31/15
CIVIL
STATE OF CALIFORNIA

AS-BUILT
Paul Lau 06/10/14

20 0 40 80
SCALE 1"=40'

NOTE:
THE CONTRACTOR SHALL VERIFY ALL CONTROLLING FIELD DIMENSIONS BEFORE ORDERING OR FABRICATING ANY MATERIAL.

BENCHMARK
S.P.S.N. 00586
6"x 6" CONC POST WITH DRIVE PIN LOCATED 1 MILE S.E. ALONG S.F.RR FROM RR CROSSING AT BOULDER AVE., AT SOUTH END OF ST. HWY R/W FENCE, 23.5 FT. NORTH OF NORTH RAIL OF RR, 41 FT. EAST OF BOULDER AVE., NORTHBOUND TRAFFIC LANE, 12 FT. NORTH OF CULVERT HEADWALL. ELEV. = 1353.459'

SUBMITTED BY: DATE:

PLANS PREPARED BY:
LIN Consulting, Inc.
Traffic, Civil and Electrical Consulting Engineers
1432 EDINGER AVENUE, #230
TUSTIN, CA 92780-6293
TEL: (714)258-8411

REVISIONS

MARK	DESCRIPTION	APPR.	DATE
1	CCO#3 - BOULDER AVE LIGHTING		
2	AS BUILT PLANS	PL	6/10/14

CITY OF HIGHLAND

DESIGNED BY GH | DRAWN BY RMW | CHECKED BY GH
SUBMITTED BY GARY HANSEN
RECOMMENDED BY GARY HANSEN
GARY HANSEN DATE
R.C.E. 26543 EXP. 3-31-14
APPROVED BY
Ernest Wong 10.6.11
ERNEST WONG, CITY ENGINEER DATE
R.C.E. 37413 EXP. 6-30-12

BOULDER AVENUE BRIDGE
OVER CITY CREEK (REPLACEMENT)

LIGHTING PLAN
BOULDER AVE
STA 118+50 TO 133+50

DRAWER NO.

SHEET 35R1 OF 37

LEGEND (THIS SHEET ONLY):

- PROPOSED DECORATIVE LIGHTING ON BRIDGE STRUCTURE
- PROPOSED NO. 5 PULL BOX
- PROPOSED 70 WATT PENDANT SOFFIT LIGHT
- EXISTING NO. 5 PULL BOX

NO POLES, CONDUCTORS OR LIGHTS INSTALLED

CONSTRUCTION NOTES: (THIS SHEET ONLY)

1. INSTALL 2-3" CONDUITS WITH PULL ROPES IN CONCRETE PARAPET WALL FOR FUTURE USE. SEE SHEET 19.
2. CONTRACTOR TO FURNISH AND INSTALL:
   - AMERON INTERNATIONAL CORSICAN POLE (CATALOG NO. 20CT12). 12'-9" HEIGHT. #32 COLOR. AND ANTI-GRAFFITI COATING OR APPROVED EQUAL.
   - KING LUMINAIRE POLE TOP ARM NO. KA63-T-2 OR APPROVED EQUAL.
   - KING LUMINAIRE NO. K124-BAAR-111-100(SSL)-8000-120-K14-PR-GRS-SST. 60 WATT LED LAMP OR APPROVED EQUAL.
3. PROVIDE SHIELDING FOR THE PENDANT SOFFIT LIGHTING. SEE DETAIL "B" (THIS SHEET) FOR MORE DETAILS.
4. INSTALL 1½" PENDANT SOFFIT LIGHTING CONDUIT. SEE BRIDGE PLAN FOR DETAILS.
5. INSTALL 70 WATT PENDANT SOFFIT LIGHTING ON BRIDGE STRUCTURE PER CALTRANS STANDARD PLAN ES-9E. SEE DETAIL "A" THIS SHEET. SEE ALSO BRIDGE PLANS.
6. INSTALL 2-2" CONDUIT IN BRIDGE DECK. USE 1-2" CONDUIT FOR LIGHTING AND ADD 2#8. PROVIDE PULL ROPE IN OTHER 2" CONDUIT FOR FUTURE USE.
7. STRUCTURE INSTALLATIONS PER CALTRANS STANDARD PLAN ES-9B DETAIL XY.
8. INSTALL BLOCKING LIGHT SHIELD IN ALL THE LUMINAIRES (20). FIELD ADJUST SHIELD AS NECESSARY TO PREVENT LIGHT FROM SHINING INTO THE CITY CREEK.
9. SEE SHEET 37AS FOR TRAIL LIGHTING.
10. INSTALL 2-2" CONDUIT WITH PULL ROPE FOR FUTURE USE.
11. INSTALL 2-2" CONDUIT IN BRIDGE DECK. USE 1-2" CONDUIT FOR LIGHTING AND ADD 2#8. INSTALL SIC IN OTHER 2" CONDUIT. SEE SHEETS 37BS AND 37CS OF 37.
12. ALL PULL BOXES SHALL BE NO. 5 PER CALTRANS STANDARD PLAN ES-8. UNLESS OTHERWISE NOTED.
13. SEE CALTRANS STANDARD PLAN ES-1A. ES-1B AND ES-1C FOR ABBREVIATIONS AND SYMBOLS.

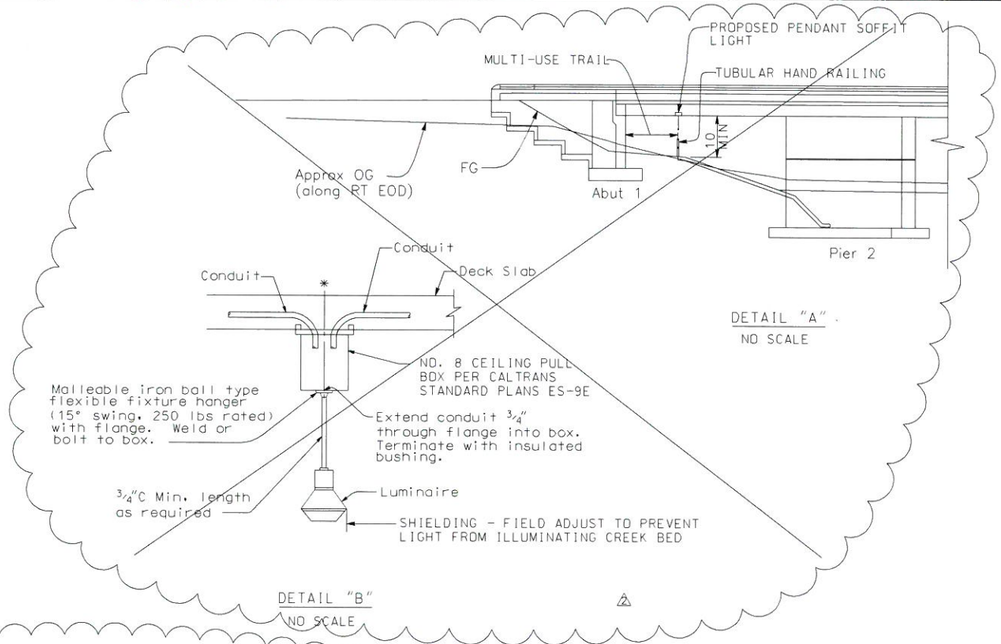

DETAIL "A"
NO SCALE

DETAIL "B"
NO SCALE

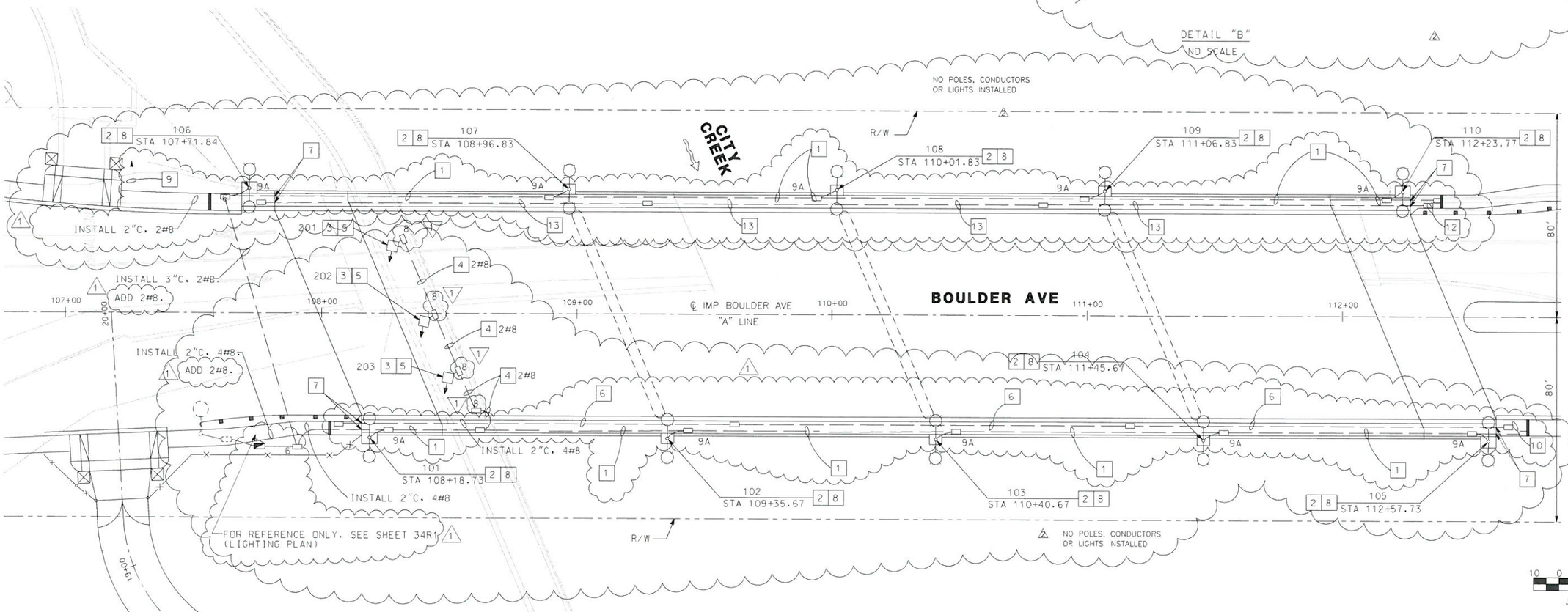

REGISTERED PROFESSIONAL ENGINEER PAUL K. C. LAU No 38388 EXP. DATE 03/31/15 CIVIL STATE OF CALIFORNIA

AS-BUILT
Paul Lau 06/10/14

10 0 20 40
SCALE 1"=20'

NOTE:
THE CONTRACTOR SHALL VERIFY ALL CONTROLLING FIELD DIMENSIONS BEFORE ORDERING OR FABRICATING ANY MATERIAL.

BENCHMARK
S.P.S.N. 00586
6'x 6' CONC POST WITH DRIVE PIN LOCATED 1 MILE S.E. ALONG S.F.RR FROM RR CROSSING AT BOULDER AVE., AT SOUTH END OF ST. HWY R/W FENCE, 23.5 FT. NORTH OF NORTH RAIL OF RR, 41 FT. EAST OF BOULDER AVE., NORTHBOUND TRAFFIC LANE, 12 FT. NORTH OF CULVERT HEADWALL.
ELEV. = 1353.459'

SUBMITTED BY: DATE:

PLANS PREPARED BY:
LIN Consulting, Inc.
Traffic, Civil and Electrical Consulting Engineers
1432 EDINGER AVENUE, #230
TUSTIN, CA 92780-6293
TEL: (714)258-8411

REVISIONS

MARK	DESCRIPTION	APPR.	DATE
1	CCO#2 - BRIDGE LIGHTING		
2	AS BUILT PLANS	PL	6/10/14

CITY OF HIGHLAND

DESIGNED BY GH | DRAWN BY RMW | CHECKED BY GH
SUBMITTED BY GARY HANSEN
RECOMMENDED BY GARY HANSEN
GARY HANSEN R.C.E. 26543 EXP. 3-31-14 DATE
APPROVED BY Ernest Wong 10.6.11
ERNEST WONG, CITY ENGINEER R.C.E. 37413 EXP. 6-30-12 DATE

BOULDER AVENUE BRIDGE OVER CITY CREEK (REPLACEMENT)

BRIDGE LIGHTING PLAN
BOULDER AVE
STA 107+00 TO 112+80

DRAWER NO.

SHEET 36R1 OF 37

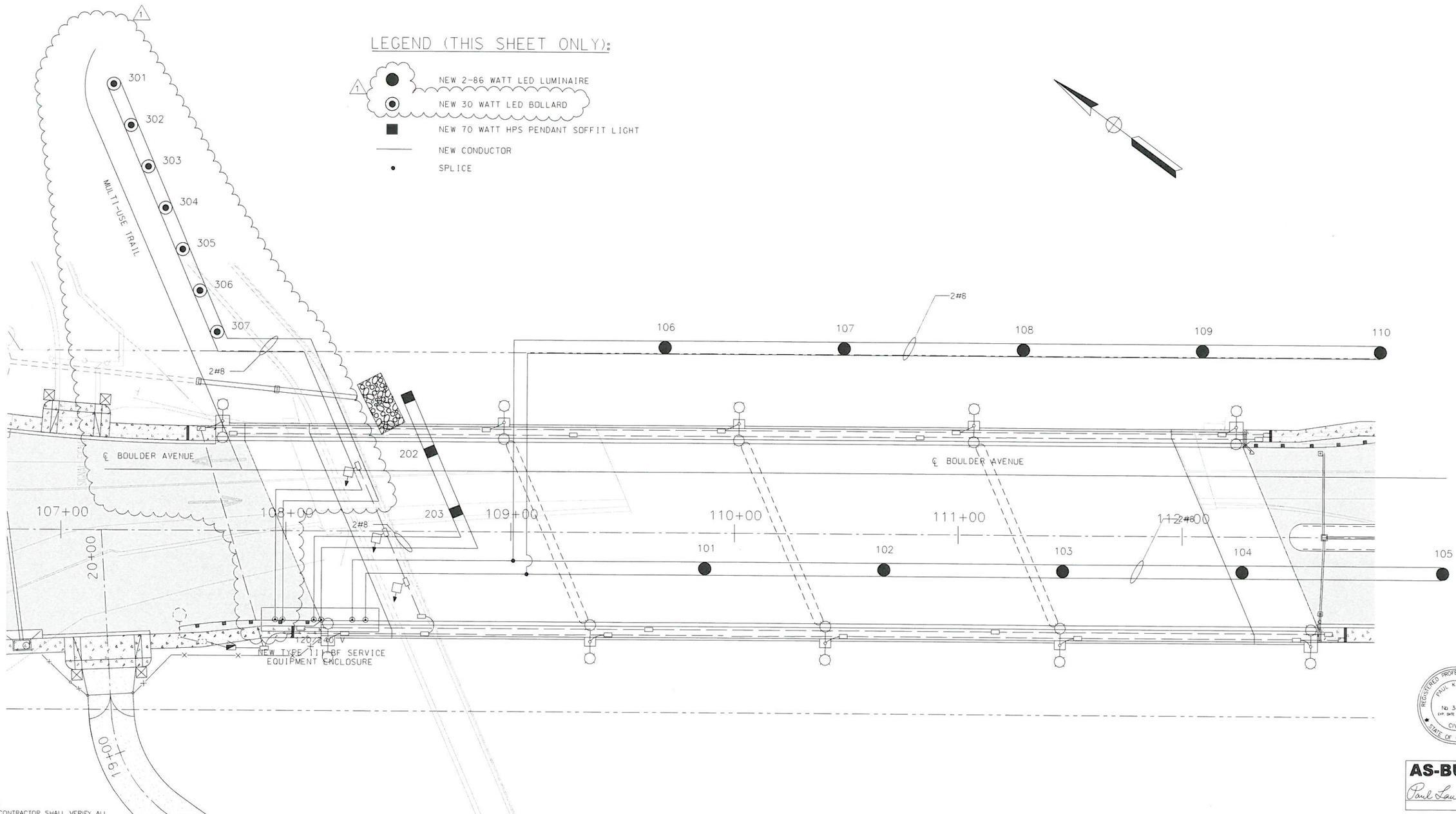

NOTE:
THE CONTRACTOR SHALL VERIFY ALL CONTROLLING FIELD DIMENSIONS BEFORE ORDERING OR FABRICATING ANY MATERIAL.

REGISTERED PROFESSIONAL ENGINEER
PAUL K. C. LAU
No. 38388
EXP. DATE 03/31/15
CIVIL
STATE OF CALIFORNIA

AS-BUILT
Paul Lau 06/10/14

BENCHMARK
S.P.S.N. 00586
6"x 6" CONC POST WITH DRIVE PIN LOCATED 1 MILE S.E. ALONG S.F.RR FROM RR CROSSING AT BOULDER AVE., AT SOUTH END OF ST. HWY R/W FENCE, 23.5 FT. NORTH OF NORTH RAIL OF RR, 41 FT. EAST OF BOULDER AVE., NORTHBOUND TRAFFIC LANE, 12 FT. NORTH OF CULVERT HEADWALL.
ELEV. = 1353.459'

REGISTERED PROFESSIONAL ENGINEER
GARY HANSEN
No. 26543
Exp. 3/31/14
CIVIL
STATE OF CALIFORNIA

SUBMITTED BY:
DATE:

PLANS PREPARED BY:
LIN Consulting, Inc.
Traffic, Civil and Electrical Consulting Engineers
1432 EDINGER AVENUE, #230
TUSTIN, CA 92780-6293
TEL: (714)258-8411

REVISIONS

MARK	DESCRIPTION	APPR.	DATE
1	CCO#2 - TRAIL LIGHTING		

CITY OF HIGHLAND

DESIGNED BY GH | DRAWN BY RMW | CHECKED BY GH
SUBMITTED BY GARY HANSEN
RECOMMENDED BY
GARY HANSEN
GARY HANSEN DATE
R.C.E. 26543 EXP. 3-31-14

APPROVED BY
Ernest Wong 10.6.11
ERNEST WONG, CITY ENGINEER DATE
R.C.E. 37413 EXP. 6-30-12

BOULDER AVENUE BRIDGE OVER CITY CREEK (REPLACEMENT)

BRIDGE WIRING DIAGRAM
BOULDER AVE
STA 107+00 TO 112+80

DRAWER NO.

SHEET 37R1 OF 37

LEGEND (THIS SHEET ONLY):

~~PROPOSED BOLLARD (SEE DETAIL "A" THIS SHEET)~~

~~PROPOSED No. 3½" PULL BOX~~ 2

CONSTRUCTION NOTES: (THIS SHEET ONLY)

1. INSTALL 2" CONDUIT. 2#8.
2. ~~INSTALL BLOCKING LIGHT SHIELD IN ALL THE BOLLARDS (7). FIELD ADJUST SHIELD AS NECESSARY TO PREVENT LIGHT FROM SHINING INTO THE CITY CREEK.~~ 2
3. ~~PROPOSED BOLLARD LIGHTING TO BE INSTALLED IN FRONT OF PICKET FENCE RAILING. SEE DETAIL "B" THIS SHEET.~~
4. SEE SHEET 36R1 FOR BRIDGE LIGHTING PLAN.

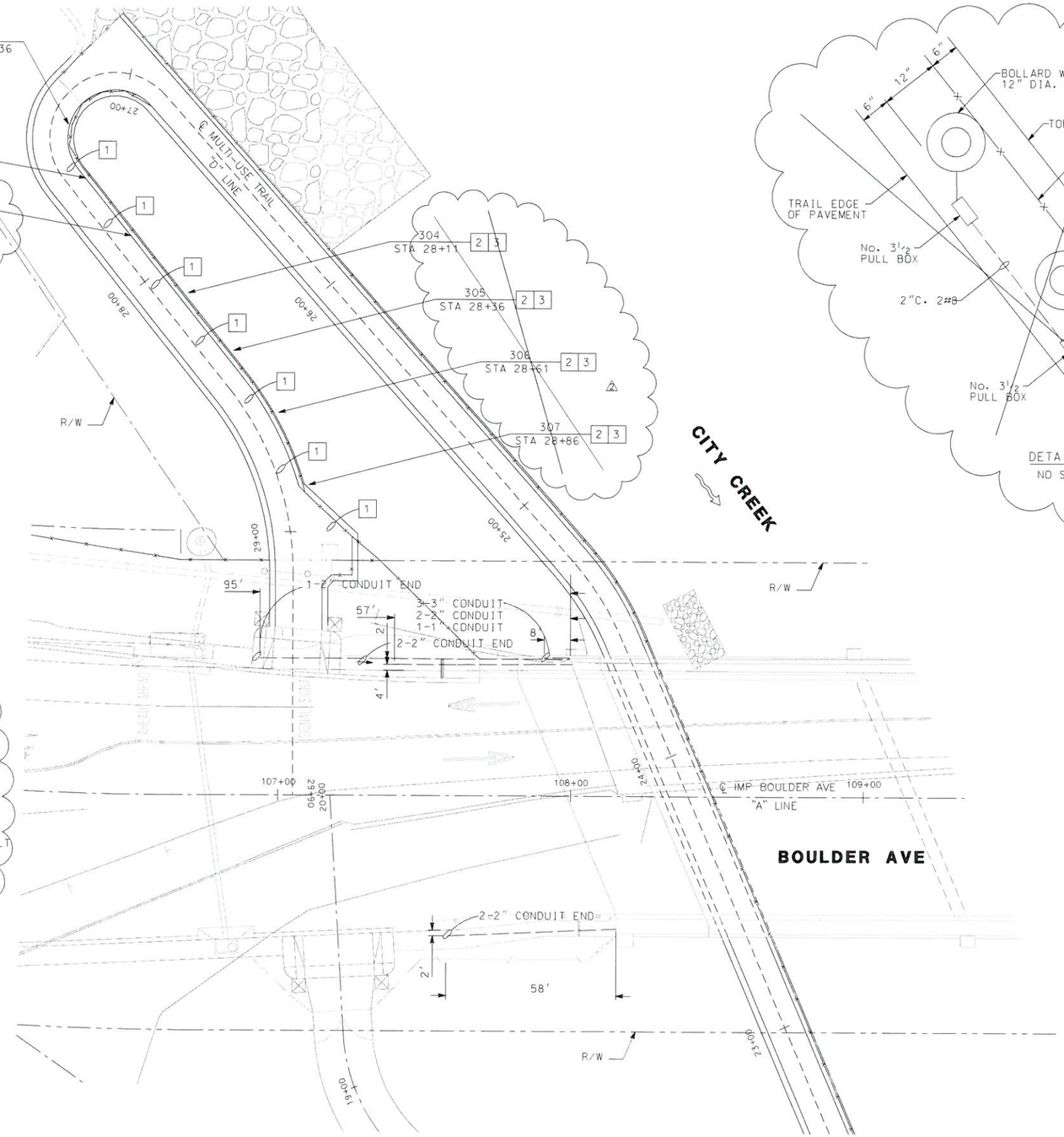

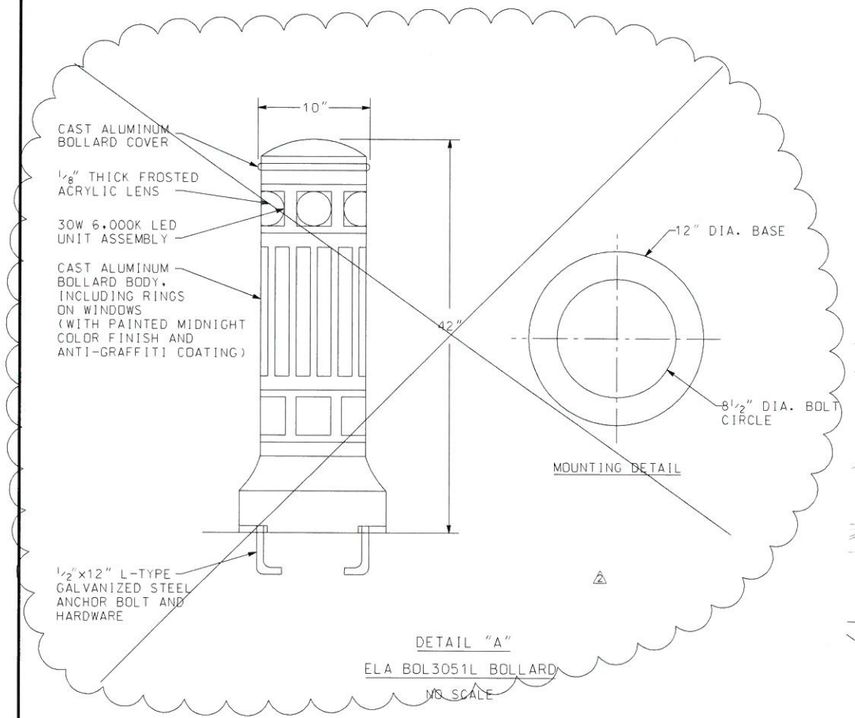

DETAIL "A"

ELA BOL3051L BOLLARD

NO SCALE

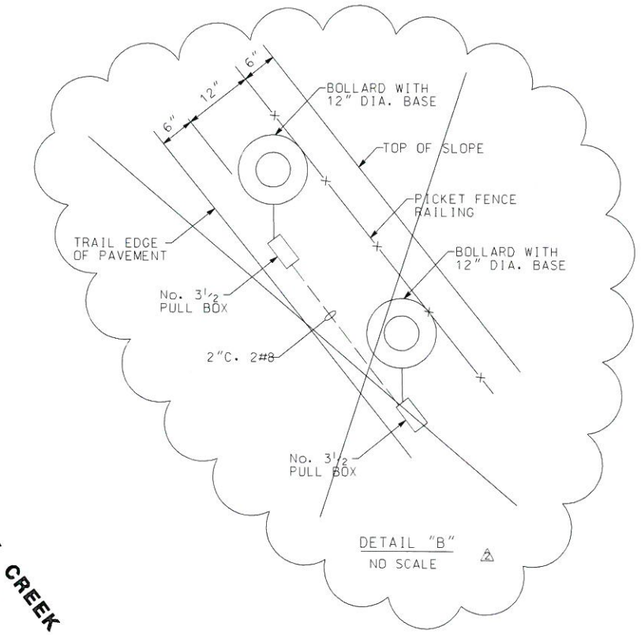

DETAIL "B"

NO SCALE

REGISTERED PROFESSIONAL ENGINEER PAUL K. C. LAU No. 38388 EXP. DATE 03/31/15 CIVIL STATE OF CALIFORNIA

AS-BUILT

Paul Lau 06/10/14

10 0 20 40

SCALE 1"=20'

NOTE:
THE CONTRACTOR SHALL VERIFY ALL CONTROLLING FIELD DIMENSIONS BEFORE ORDERING OR FABRICATING ANY MATERIAL.

BENCHMARK

S.P.S.N. 00586
6'x 6' CONC POST WITH DRIVE PIN LOCATED 1 MILE S.E. ALONG S.F.RR FROM RR CROSSING AT BOULDER AVE., AT SOUTH END OF ST. HWY R/W FENCE, 23.5 FT. NORTH OF NORTH RAIL OF RR, 41 FT. EAST OF BOULDER AVE., NORTHBOUND TRAFFIC LANE, 12 FT. NORTH OF CULVERT HEADWALL.
ELEV. = 1353.459'

REGISTERED PROFESSIONAL ENGINEER GARY HANSEN No. 26543 EXP. 3/31/14 CIVIL STATE OF CALIFORNIA

SUBMITTED BY: DATE:

PLANS PREPARED BY:

LIN Consulting, Inc.
Traffic, Civil and Electrical Consulting Engineers
1432 EDINGER AVENUE, #230
TUSTIN, CA 92780-6293
TEL: (714)258-8411

REVISIONS

MARK	DESCRIPTION	APPR.	DATE
1	CCO#2 - TRAIL LIGHTING		
2	AS BUILT PLANS	PL	6/10/14

CITY OF HIGHLAND

DESIGNED BY GH | DRAWN BY RMW | CHECKED BY GH

SUBMITTED BY GARY HANSEN

RECOMMENDED BY GARY HANSEN

GARY HANSEN DATE
R.C.E. 26543 EXP. 3-31-14

APPROVED BY Ernest Wong 10.6.11

ERNEST WONG, CITY ENGINEER DATE
R.C.E. 37413 EXP. 6-30-12

BOULDER AVENUE BRIDGE OVER CITY CREEK (REPLACEMENT)

TRAIL LIGHTING PLAN
BOULDER AVE
STA 27+36 TO 28+86

DRAWER NO.

SHEET 37AS OF 37