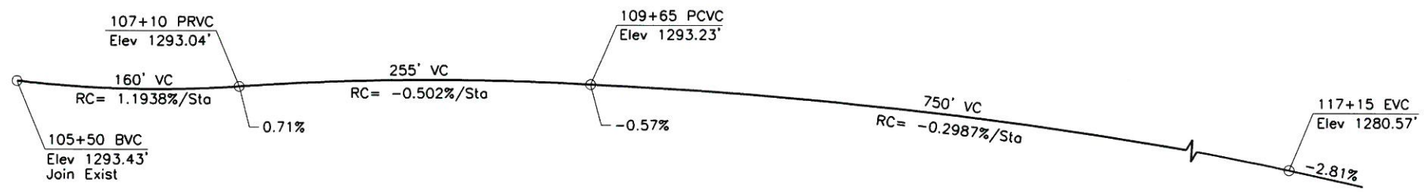

PROFILE GRADE
No Scale

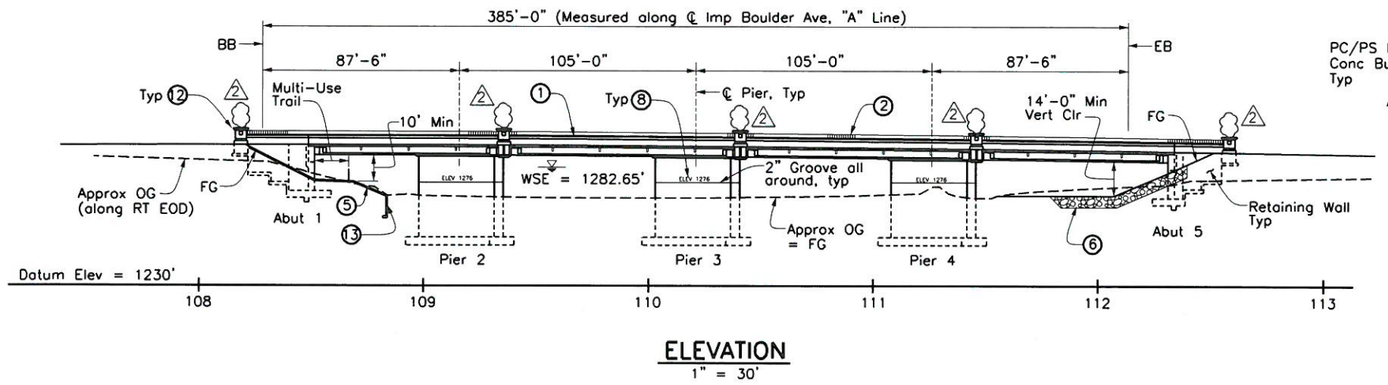

ELEVATION
1" = 30'

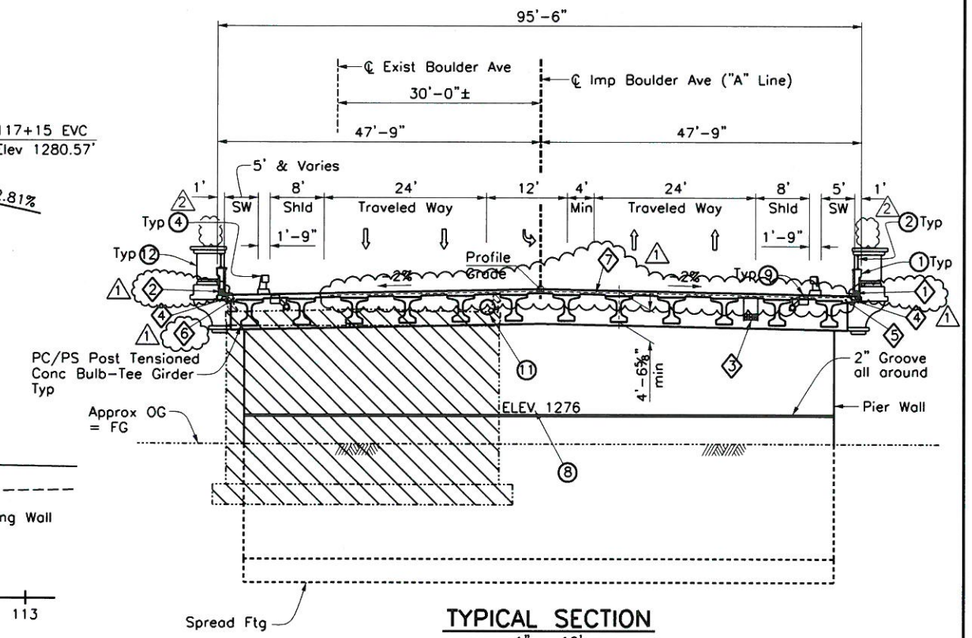

TYPICAL SECTION
1" = 10'

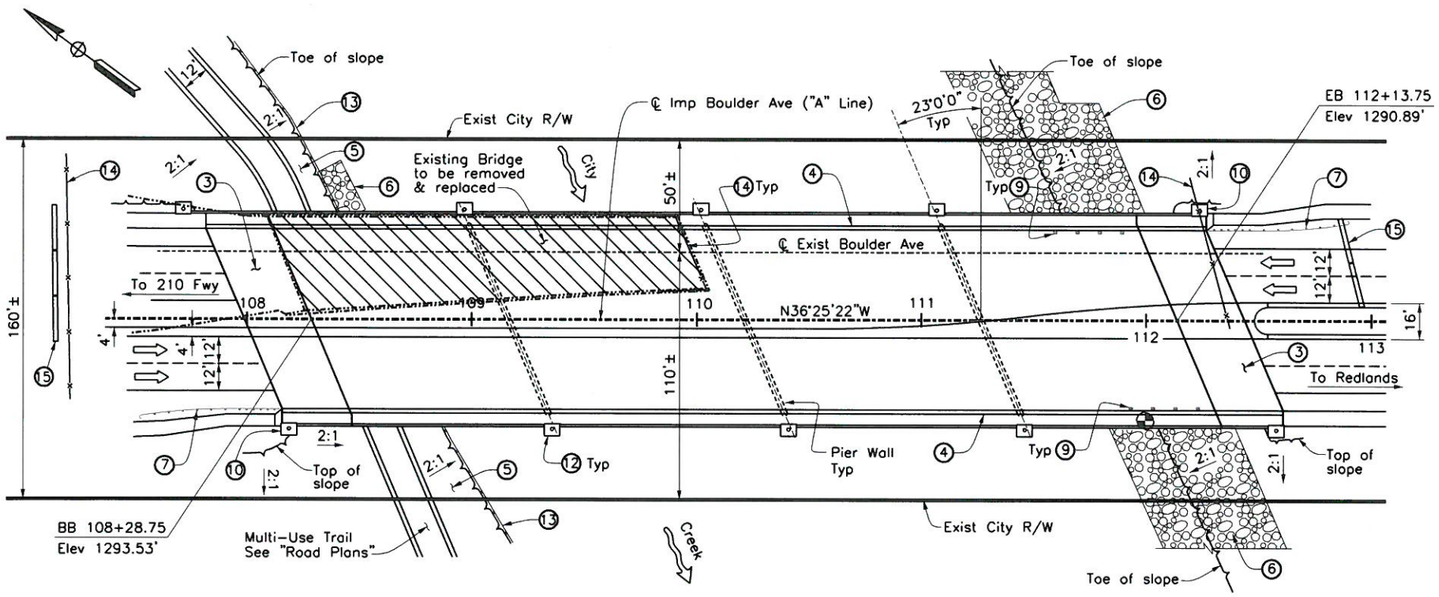

PLAN
1" = 30'

UTILITY LEGEND

1
1. 2- 3"ø Future Utility Conduits
2. 1- 3"ø Utility Conduit (Time Warner)
   1- 3"ø Future Utility Conduit
3. 6- 5"ø Future Electrical Conduits (To be installed by SCE Contractor)
4. 1- 2"ø Conduit (Street Lighting)
5. 1- 2"ø Future Utility Conduit
6. 1- 2"ø Conduit (Signal Interconnect) (1)
7. 1- 1 1/2"ø Conduit (Soffit Luminaire)

Note:
For "General Notes", "Index to Plans" and "Standard Plans" list, see "Index to Plans" sheet.

LEGEND

1. Concrete Parapet Wall
2. Metal Railing
3. Approach Slab, Type N(30S)
4. Conc Barrier Type 80 (Mod)
5. Concrete Slope Protection, See "Road Plans" (2)
6. Rock Slope Protection, See "Road Plans"
7. MBGR, Type CAT, see "Road Plans"
8. Paint "Elev 1276" above 2" groove (Lettering size 8" minimum)
9. Deck Drain, Type D-1
10. Paint "Br.No." & Year constructed
11. Future Utility 26"ø Opening (2)
12. Pilaster/Pedestal
13. Cut-off Wall, See "Road Plans"
14. Remove existing Chain Link Fencing
15. Remove existing Temporary K-Railing

⇦ Indicates Direction of Traffic
—·—· Indicates Existing Structure
▨ Indicates Existing Bridge Removal Limits
◔ Minimum Vertical Clearance is greater than 14' across creek bed for SBCFCD maintenance vehicle access

REGISTERED PROFESSIONAL ENGINEER TODD W. DUDLEY No 39514 EXP. DATE 12/31/13 CIVIL STATE OF CALIFORNIA

AS-BUILT 08/10/14

RECORD DRAWINGS
These Record Drawings (As-Builts) are based upon review and reliance on the design revisions during construction, field survey data, marked up prints from the Contractor and / or City Inspector, and a final site inspection.

BENCHMARK
S.P.S.N. 00586
6"x 6" CONC POST WITH DRIVE PIN LOCATED 1 MILE S.E. ALONG S.F.RR FROM RR CROSSING AT BOULDER AVE., AT SOUTH END OF ST. HWY R/W FENCE, 23.5 FT. NORTH OF NORTH RAIL OF RR, 41 FT. EAST OF BOULDER AVE., NORTHBOUND TRAFFIC LANE, 12 FT. NORTH OF CULVERT HEADWALL.
ELEV. = 1353.459'

REGISTERED PROFESSIONAL ENGINEER MOHAN S. CHAR No. 57894 Exp. 6/30/14 CIVIL STATE OF CALIFORNIA

SUBMITTED BY: MSchar DATE: 6-16-11

PLANS PREPARED BY:
AECOM
901 VIA PIEMONTE, 5TH FLOOR
ONTARIO, CALIFORNIA 91764

REVISIONS			
1	CCO#2 Revised Utility Legend & conduits	MC	9/04/12
2	AS-BUILT REVISIONS	TD	8/10/14
MARK	DESCRIPTION	APPR.	DATE

CITY OF HIGHLAND

DESIGNED BY	DRAWN BY	CHECKED BY
KG	RA	MC

SUBMITTED BY: TODD DUDLEY
RECOMMENDED BY: MOHAN CHAR 10/4/11
MOHAN S. CHAR DATE R.C.E. 57894 EXP. 6-30-14
APPROVED BY: Ernest Wong 10.6.11
ERNEST WONG, CITY ENGINEER DATE R.C.E. 37413 EXP. 6-30-14

BOULDER AVENUE BRIDGE OVER CITY CREEK (REPLACEMENT)

GENERAL PLAN

DRAWER NO.

SHEET 1R1 OF 36

GENERAL NOTES:
LOAD & RESISTANCE FACTOR DESIGN

Design:
AASHTO LRFD Bridge Design Specifications, 4th Edition and the Caltrans Amendments dated December 31, 2008. except that Geotechnical design of deep foundations, earth retaining systems, bridge (including barrier & railing) details taken from Standard Plans May 2006, Standard Bridge Details (XS sheets) are designed using Bridge Design Specifications (1996 AASHTO with Revisions by Caltrans)

Seismic Design: Caltrans Seismic Design Criteria (SDC), Version 1.6 dated November 2010

Dead Load: Includes 35 psf for future wearing surface & 10% increase of deck dead load between girders for stay-in-place deck forms.

Live Loading: HL-93 w/ Low-Boy and Permit Design Load

Seismic Loading: Site Specific ARS Curve

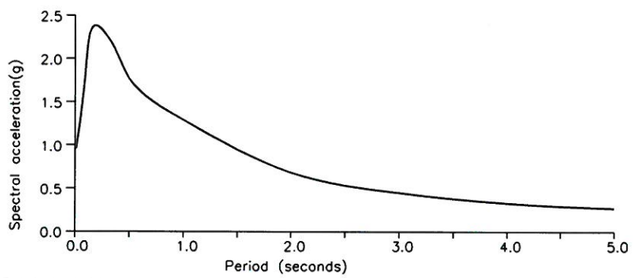

Reinforced Concrete:
fy = 60,000 psi
f'c = 3,600 psi, Unless otherwise noted
n = 8

Prestressed Concrete:
See "Prestressing Notes" on "Post Tensioning Tendon Layout" sheet.

STANDARD PLANS DATED JULY 2006

THE FOLLOWING STATE OF CALIFORNIA DEPARTMENT OF TRANSPORTATION STANDARD PLANS ARE PART OF THESE CONTRACT DRAWINGS

	A10A	ACRONYMS AND ABBREVIATIONS (A-L)
	A10B	ACRONYMS AND ABBREVIATIONS (M-Z)
	A10C	SYMBOLS (SHEET 1 OF 2)
	A10D	SYMBOLS (SHEET 2 OF 2)
	A62B	LIMITS OF PAYMENT FOR EXCAVATION AND BACKFILL - BRIDGE SURCHARGE AND WALL
	A62C	LIMITS OF PAYMENT FOR EXCAVATION AND BACKFILL - BRIDGE
	B0-1	BRIDGE DETAILS
	B0-3	BRIDGE DETAILS
	B0-5	BRIDGE DETAILS
	B0-13	BRIDGE DETAILS
	B3-1	RETAINING WALL TYPE 1 - H=4' THROUGH 30'
	B3-8	RETAINING WALL DETAILS No. 1
	B6-10	UTILITY OPENINGS, T-BEAM
RSP	B6-21	JOINT SEALS (MAXIMUM MOVMENT RATING = 2")
	B7-6	DECK DRAINS, TYPES D-1 & D-2
	B7-8	DECK DRAINAGE DETAILS
RSP	B11-60	CONCRETE BARRIER TYPE 80 (SHEET 1 OF 2)
	B11-61	CONCRETE BARRIER TYPE 80 (SHEET 2 OF 2)
	B14-5	WATER SUPPLY LINE (DETAILS) (PIPE SIZE LESS THAN NPS 4)
	ES-9E	ELECTRICAL SYSTEMS (ELECTRICAL DETAILS STRUCTURE INSTALLATIONS)

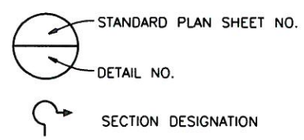

INDEX TO PLANS (STRUCTURE)

SHEET No.	TITLE
1.	GENERAL PLAN
2.	INDEX TO PLANS
3.	DECK CONTOURS
4.	DEMOLITION DETAILS
5.	FOUNDATION PLAN
6.	ABUTMENT 1 LAYOUT
7.	ABUTMENT 5 LAYOUT
8.	ABUTMENT DETAILS No. 1
9.	ABUTMENT DETAILS No. 2
10.	ABUTMENT DETAILS No. 3
11.	ABUTMENT DETAILS No. 4
12.	RETAINING WALL No. 1 LAYOUT
13.	RETAINING WALL No. 2 LAYOUT
14.	RETAINING WALL No. 3 LAYOUT
15.	RETAINING WALL No. 4 LAYOUT
16.	PIER LAYOUT
17.	PIER DETAILS No. 1
18.	PIER DETAILS No. 2
19.	TYPICAL SECTION
20.	ABUTMENT DIAPHRAGM DETAILS
21.	GIRDER LAYOUT
22.	PC/PS BULB-TEE GIRDER DETAILS No. 1
23.	PC/PS BULB-TEE GIRDER DETAILS No. 2
24.	POST TENSIONING TENDON LAYOUT
25.	DECK REINFORCEMENT
26.	STRUCTURE APPROACH TYPE N(30S)
27.	STRUCTURE APPROACH DRAINAGE DETAILS
28.	CONCRETE PARAPET RAILING DETAILS No. 1
29.	CONCRETE PARAPET RAILING DETAILS No. 2
30.	PEDESTAL DETAILS
31.	PILASTER DETAILS
32.	CONSTRUCTION SEQUENCE
33.	UTILITY DETAILS
34.	TERMS AND SYMBOLS FOR BORING LOGS (1 OF 2)
35.	TERMS AND SYMBOLS FOR BORING LOGS (2 OF 2)
36.	LOG OF TEST BORINGS

REGISTERED PROFESSIONAL ENGINEER TODD W. DUDLEY No 39514 EXP. DATE 12/31/15 CIVIL STATE OF CALIFORNIA

AS-BUILT 06/10/14
NO AS-BUILT CHANGES

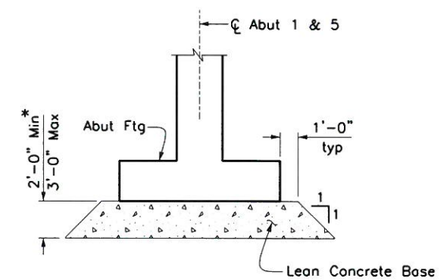

LIMITS OF LEAN CONCRETE BASE
No Scale

Note: Limits are also applicable to Retaining Walls.

*To be determined by the Engineer.

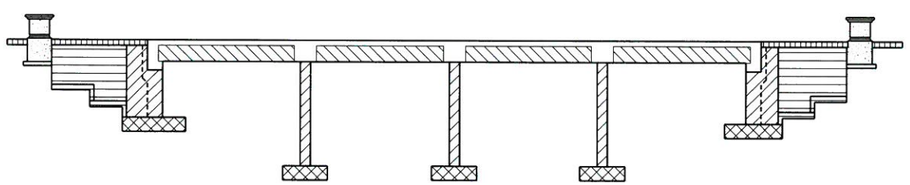

CONCRETE STRENGTH AND TYPE LIMITS
No Scale

- Structural Concrete, Bridge (5,000 psi @ 28 days)
- Structural Concrete, Retaining Wall (3,600 psi @ 28 days)
- Structural Concrete, Bridge Footing (3,600 psi @ 28 days)
- Structural Concrete, Approach Slab
- Structural Concrete, Bridge (4,000 psi @ 28 days)
- PC/PS Prestressed Concrete Girders, see "PC/PS Bulb-Tee Girder Details No. 2" sheet
- End Pilaster (3,600 psi @ 28 days)

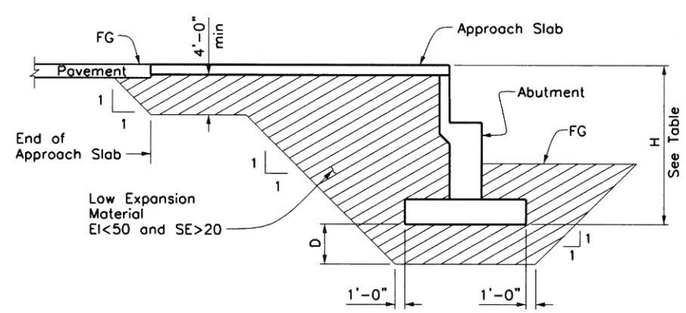

Note:
Expansion Index (EI) :
to be determined by ASTM D4829
Sand Equivalent (SE) :
to be determined by California test method 217

H	D
< 16'	4'-0"
> 16'	0'

LIMITS OF LOW EXPANSION MATERIAL
No Scale

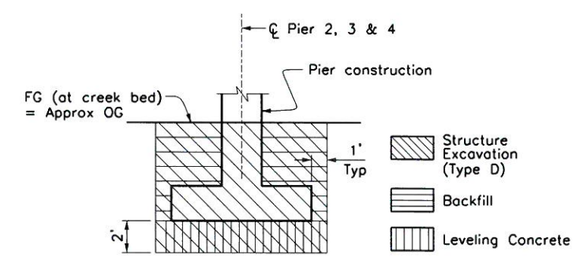

PAY LIMITS OF EXACAVATION AND BACKFILL AT PIERS
No Scale

Note: Structure Excavation (Type D) is also applicable at Abutments and Retaining Walls.

BENCHMARK
S.P.S.N. 00586
6"x 6" CONC POST WITH DRIVE PIN LOCATED 1 MILE S.E. ALONG S.F.RR FROM RR CROSSING AT BOULDER AVE., AT SOUTH END OF ST. HWY R/W FENCE, 23.5 FT. NORTH OF NORTH RAIL OF RR, 41 FT. EAST OF BOULDER AVE., NORTHBOUND TRAFFIC LANE, 12 FT. NORTH OF CULVERT HEADWALL.
ELEV. = 1353.459'

REGISTERED PROFESSIONAL ENGINEER MOHAN S. CHAR No. 57894 Exp. 6/30/14 CIVIL STATE OF CALIFORNIA

SUBMITTED BY: DATE: 6-16-11

PLANS PREPARED BY:
AECOM
901 VIA PIEMONTE, 5TH FLOOR
ONTARIO, CALIFORNIA 91764

REVISIONS

MARK	DESCRIPTION	APPR.	DATE
1	AS BUILT PLANS	TD	6/10/14

CITY OF HIGHLAND

DESIGNED BY KG | DRAWN BY RA | CHECKED BY MC
SUBMITTED BY TODD DUDLEY
RECOMMENDED BY MOHAN CHAR 10/4/11
MOHAN S. CHAR DATE
R.C.E. 57894 EXP. 6-30-14
APPROVED BY 10.6.11
ERNEST WONG, CITY ENGINEER DATE
R.C.E. 37413 EXP. 6-30-14

BOULDER AVENUE BRIDGE
OVER CITY CREEK (REPLACEMENT)

INDEX TO PLANS

DRAWER NO.

SHEET 2 OF 36

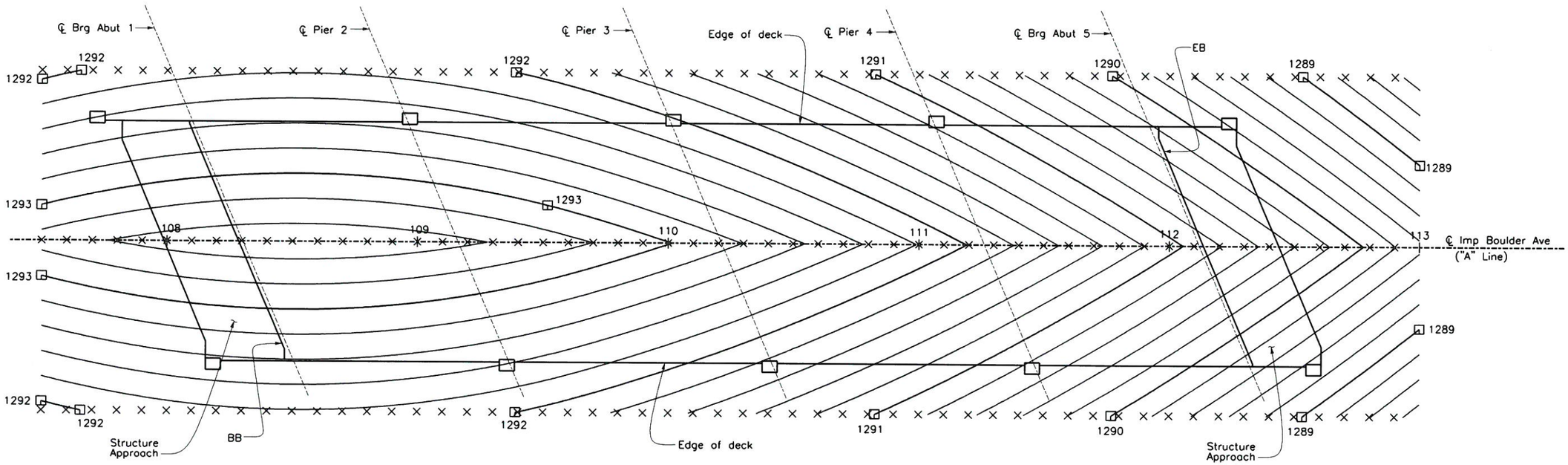

PLAN
1" = 20'

LEGEND

× 10' interval along "A" Line

⊡ Indicates even foot contour

Contour interval is 0.20'

Contours do not include allowance for camber.

REGISTERED PROFESSIONAL ENGINEER TODD W. DUDLEY No 39514 EXP. DATE 12/31/13 CIVIL STATE OF CALIFORNIA

AS-BUILT
08/10/14
NO AS-BUILT CHANGES

BENCHMARK

S.P.S.N. 00586
6'x 6' CONC POST WITH DRIVE PIN LOCATED
1 MILE S.E. ALONG S.F.RR FROM RR CROSSING
AT BOULDER AVE., AT SOUTH END OF ST. HWY
R/W FENCE, 23.5 FT. NORTH OF NORTH RAIL OF RR,
41 FT. EAST OF BOULDER AVE., NORTHBOUND
TRAFFIC LANE, 12 FT. NORTH OF CULVERT HEADWALL.
ELEV. = 1353.459'

REGISTERED PROFESSIONAL ENGINEER MOHAN S. CHAR No. 57894 Exp. 6/30/14 CIVIL STATE OF CALIFORNIA

SUBMITTED BY: MSchar DATE: 6-16-11

PLANS PREPARED BY:
AECOM
901 VIA PIEMONTE, 5TH FLOOR
ONTARIO, CALIFORNIA 91764

REVISIONS

MARK	DESCRIPTION	APPR.	DATE
1	AS BUILT PLANS	TD	6/10/14

CITY OF HIGHLAND

DESIGNED BY KG | DRAWN BY RA | CHECKED BY MC
SUBMITTED BY TODD DUDLEY
RECOMMENDED BY MOHAN CHAR 10/4/11
MOHAN S. CHAR R.C.E. 57894 EXP. 6-30-14 DATE
APPROVED BY Ernest Wong 10.6.11
ERNEST WONG, CITY ENGINEER R.C.E. 37413 EXP. 6-30-14 DATE

BOULDER AVENUE BRIDGE OVER CITY CREEK (REPLACEMENT)

DECK CONTOURS

DRAWER NO.

SHEET 3 OF 36

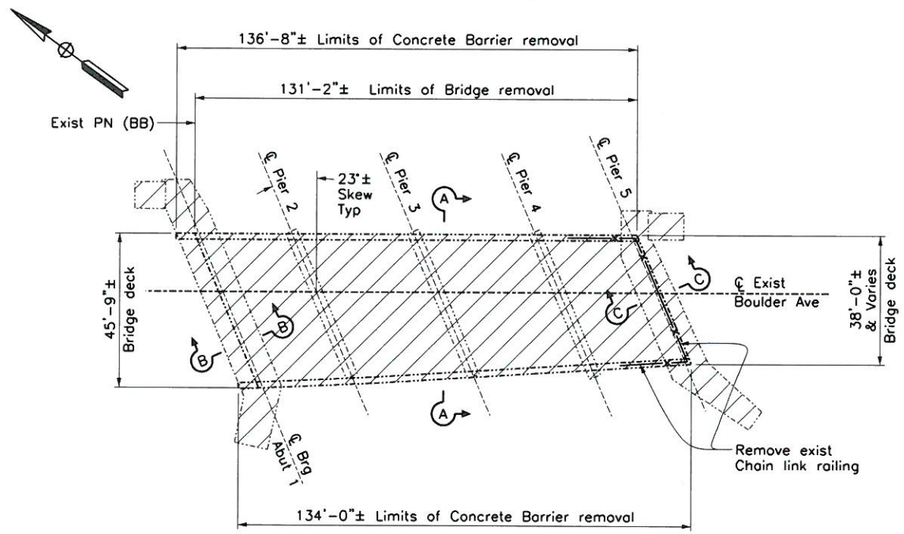

PLAN
1" = 20'

LEGEND

Limits of existing Bridge Removal

Indicates existing Bridge

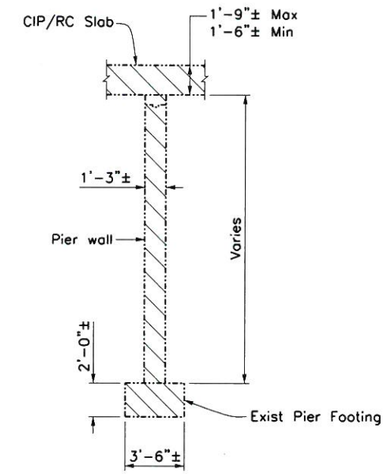

PIER WALL SECTION
¼" = 1'-0"
(Piers 2, 3 & 4)

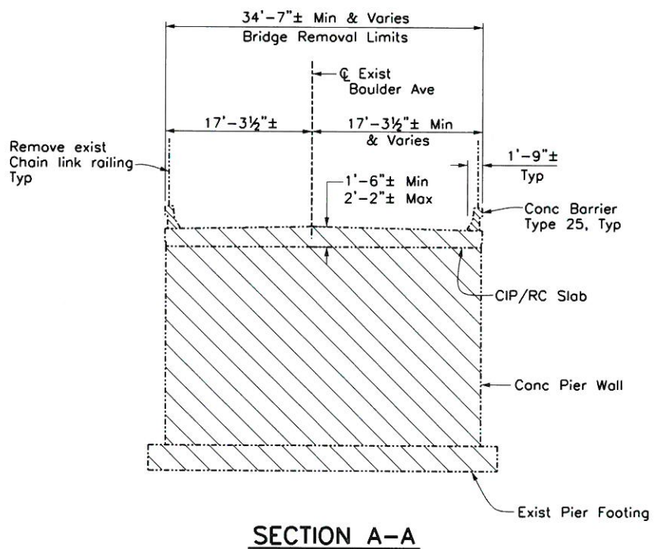

SECTION A-A
⅛" = 1'-0"

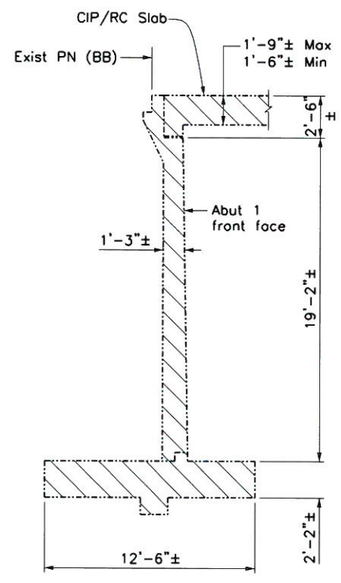

SECTION B-B
¼" = 1'-0"
(Abut 1)

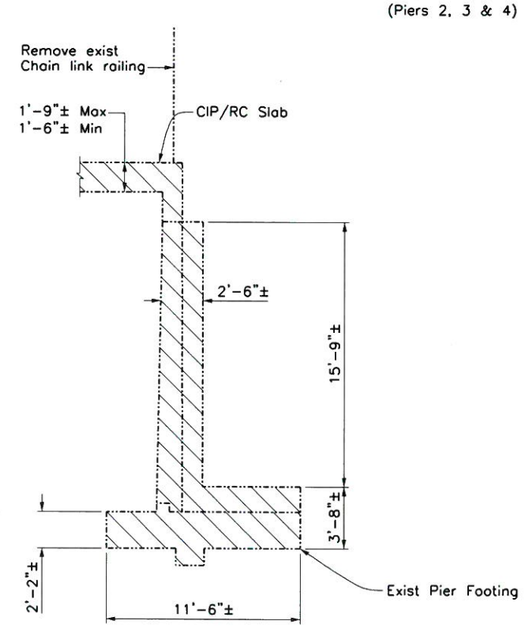

SECTION C-C
¼" = 1'-0"
(Pier 5)

REGISTERED PROFESSIONAL ENGINEER TODD W. DUDLEY No. 39514 EXP. DATE 12/31/15 CIVIL STATE OF CALIFORNIA

AS-BUILT
08/10/14
NO AS-BUILT CHANGES

BENCHMARK

S.P.S.N. 00586
6'x 6' CONC POST WITH DRIVE PIN LOCATED
1 MILE S.E. ALONG S.F.RR FROM RR CROSSING
AT BOULDER AVE., AT SOUTH END OF ST. HWY
R/W FENCE, 23.5 FT. NORTH OF NORTH RAIL OF RR,
41 FT. EAST OF BOULDER AVE., NORTHBOUND
TRAFFIC LANE, 12 FT. NORTH OF CULVERT HEADWALL.
ELEV. = 1353.459'

REGISTERED PROFESSIONAL ENGINEER MOHAN S. CHAR No. 57894 Exp. 6/30/14 CIVIL STATE OF CALIFORNIA

SUBMITTED BY: DATE: 6-16-11

PLANS PREPARED BY:

AECOM
901 VIA PIEMONTE, 5TH FLOOR
ONTARIO, CALIFORNIA 91764

REVISIONS

MARK	DESCRIPTION	APPR.	DATE
1	AS BUILT PLANS	TD	6/10/14

CITY OF HIGHLAND

DESIGNED BY KG | DRAWN BY RA | CHECKED BY MC
SUBMITTED BY TODD DUDLEY
RECOMMENDED BY MOHAN CHAR 10/4/11
MOHAN S. CHAR R.C.E. 57894 EXP. 6-30-14 DATE
APPROVED BY 10.6.11
ERNEST WONG, CITY ENGINEER R.C.E. 37413 EXP. 6-30-14 DATE

BOULDER AVENUE BRIDGE OVER CITY CREEK (REPLACEMENT)

DEMOLITION DETAILS

DRAWER NO.

SHEET 4 OF 36

Hydrologic & Hydraulic Data Summary			
Description	Base Flood	Design Flood	Overtopping/ Record Flood
Frequency (Years)	100	100	N/A
Discharge (cfs)	10,000	15,500	N/A
W.S. Elevation (ft)	1281.15	1282.84	N/A

Floodplain data are based upon information available when the plans were prepared. The accuracy of said information is not warranted by the City of Highland or the Engineering Consultants. Any interested for affected parties should make their own investigations.

REGISTERED PROFESSIONAL ENGINEER TODD W. DUDLEY No. 39514 EXP. DATE 12/31/15 CIVIL STATE OF CALIFORNIA

AS-BUILT
08/10/14
NO AS-BUILT CHANGES

SPREAD FOOTING DATA TABLE

SUPPORT LOCATION	Working Stress Design (WSD)		Load and Resistance Factor Design (LRFD)		
	Permissible Gross Contact Stress (Settlement) (ksf)	Allowable Gross Bearing Capacity (ksf)	Service Permissible Net Contact Stress (Settlement) (ksf)	Strength Factored Gross Nominal Bearing Resistance ϕ_b = 0.45 (ksf)	Extreme Event Factored Gross Nominal Bearing Resistance ϕ_b = 1.00 (ksf)
Abut 1	–	4	N/A	N/A	N/A
Pier 2	N/A	N/A	10.5	19	50
Pier 2	N/A	N/A	10.5	19	50
Pier 3	N/A	N/A	10.5	19	50
Abut 5	–	5	N/A	N/A	N/A

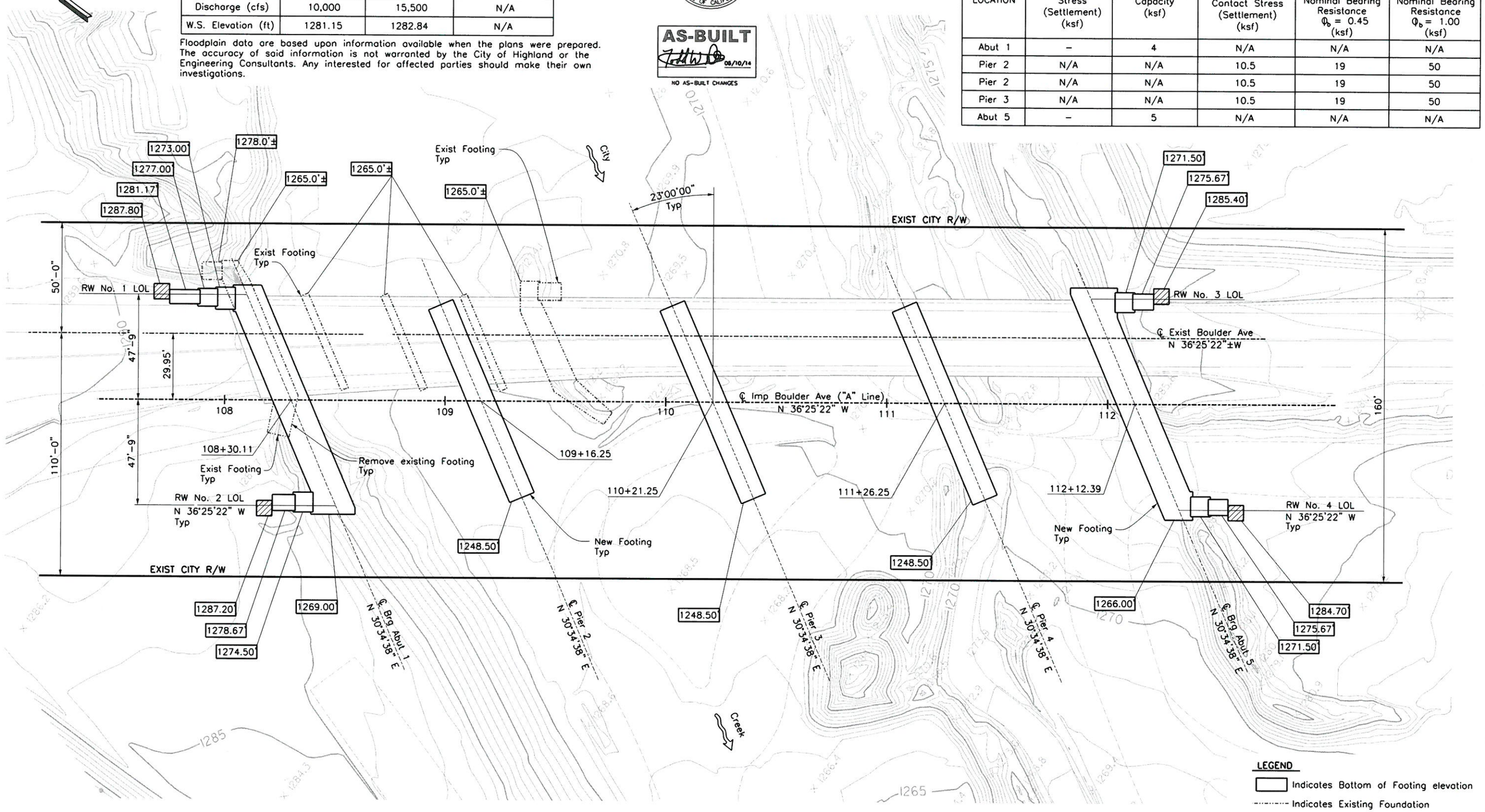

PLAN
1" = 20'

LEGEND
- Indicates Bottom of Footing elevation
- Indicates Existing Foundation
- Indicates Direction of Flow
- Indicates Pilaster Footing

BENCHMARK
S.P.S.N. 00586
6"x 6" CONC POST WITH DRIVE PIN LOCATED 1 MILE S.E. ALONG S.F.RR FROM RR CROSSING AT BOULDER AVE., AT SOUTH END OF ST. HWY R/W FENCE, 23.5 FT. NORTH OF NORTH RAIL OF RR, 41 FT. EAST OF BOULDER AVE., NORTHBOUND TRAFFIC LANE, 12 FT. NORTH OF CULVERT HEADWALL.
ELEV. = 1353.459'

REGISTERED PROFESSIONAL ENGINEER MOHAN S. CHAR No. 57894 Exp. 6/30/14 CIVIL STATE OF CALIFORNIA

SUBMITTED BY: MSchar DATE: 6-16-11

PLANS PREPARED BY:
AECOM
901 VIA PIEMONTE, 5TH FLOOR
ONTARIO, CALIFORNIA 91764

REVISIONS

MARK	DESCRIPTION	APPR.	DATE
1	AS BUILT PLANS	TD	6/10/14

CITY OF HIGHLAND

DESIGNED BY KG | DRAWN BY RA | CHECKED BY MC
SUBMITTED BY TODD DUDLEY
RECOMMENDED BY MOHAN CHAR 10/4/11
MOHAN S. CHAR R.C.E. 57894 EXP. 6-30-14 DATE
APPROVED BY Ernest Wong 10.6.11
ERNEST WONG, CITY ENGINEER R.C.E. 37413 EXP. 6-30-14 DATE

BOULDER AVENUE BRIDGE OVER CITY CREEK (REPLACEMENT)

FOUNDATION PLAN

DRAWER NO.

SHEET 5 OF 36

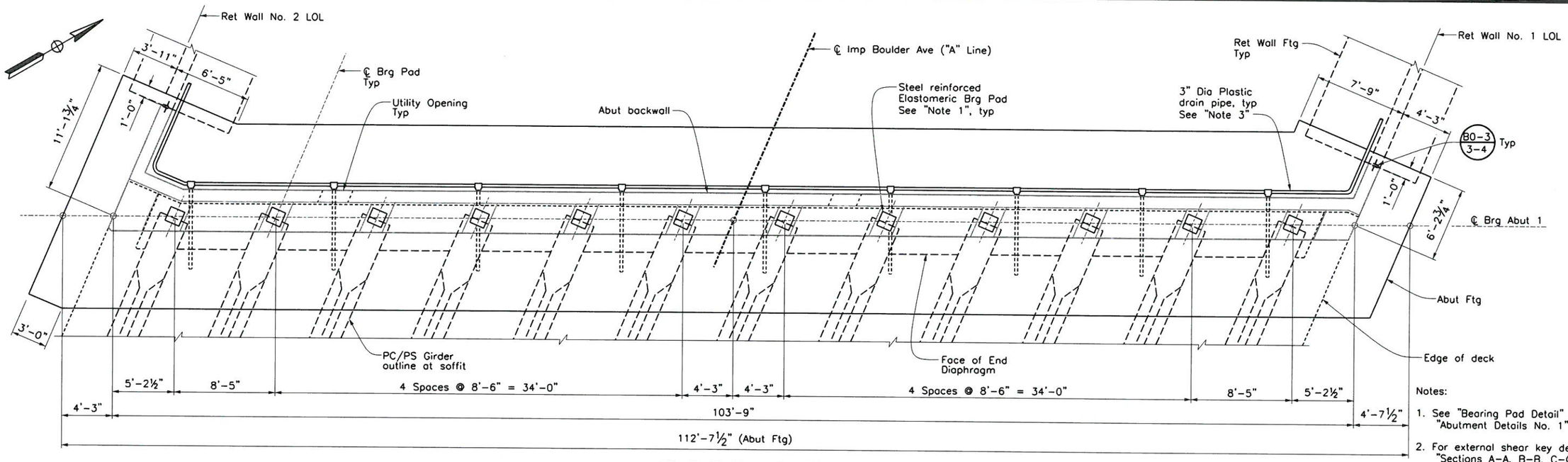

ABUTMENT 1 PLAN

¼" = 1'-0"

Notes:

1. See "Bearing Pad Detail" on "Abutment Details No. 1" sheet.
2. For external shear key details & "Sections A-A, B-B, C-C & D-D", see "Abutment Details No. 3" sheet.
3. For drainage details, see "Structure Approach Drainage Details" sheet.

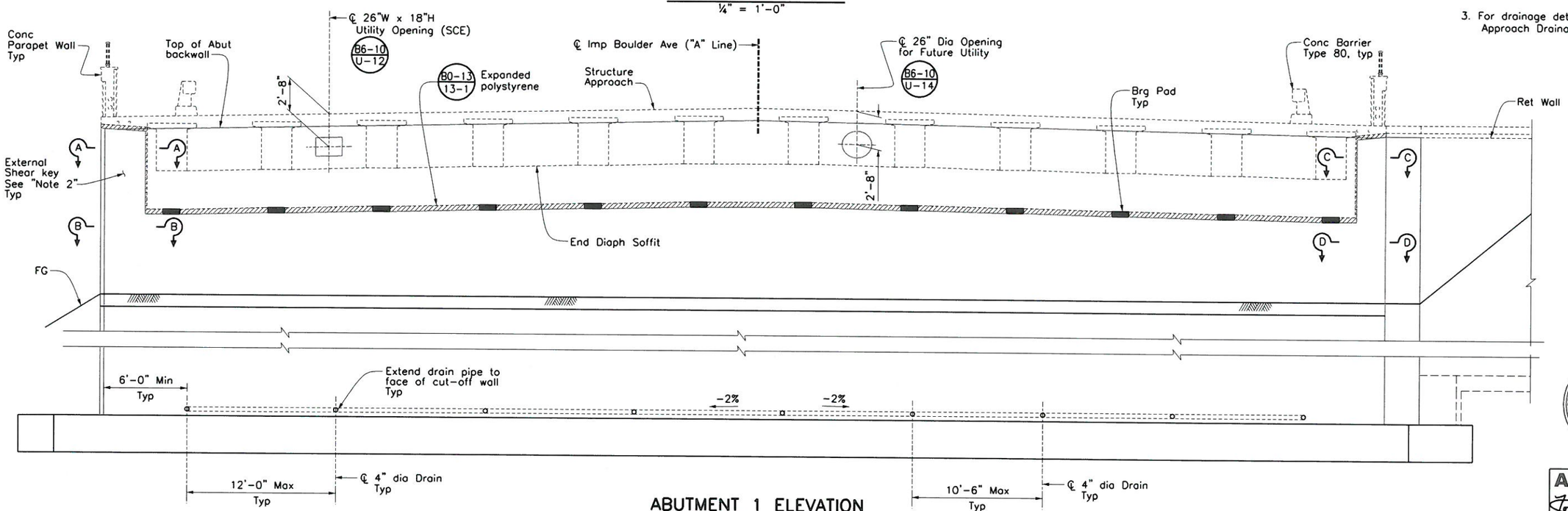

ABUTMENT 1 ELEVATION

¼" = 1'-0"

REGISTERED PROFESSIONAL ENGINEER TODD W. DUDLEY No. 39514 EXP. DATE 12/31/15 CIVIL STATE OF CALIFORNIA

AS-BUILT
08/10/14
NO AS-BUILT CHANGES

BENCHMARK

S.P.S.N. 00586
6'x 6' CONC POST WITH DRIVE PIN LOCATED 1 MILE S.E. ALONG S.F.RR FROM RR CROSSING AT BOULDER AVE., AT SOUTH END OF ST. HWY R/W FENCE, 23.5 FT. NORTH OF NORTH RAIL OF RR, 41 FT. EAST OF BOULDER AVE., NORTHBOUND TRAFFIC LANE, 12 FT. NORTH OF CULVERT HEADWALL.
ELEV. = 1353.459'

REGISTERED PROFESSIONAL ENGINEER MOHAN S. CHAR No. 57894 Exp. 6/30/14 CIVIL STATE OF CALIFORNIA

SUBMITTED BY: MSchar DATE: 6-16-11

PLANS PREPARED BY:
AECOM
901 VIA PIEMONTE, 5TH FLOOR
ONTARIO, CALIFORNIA 91764

REVISIONS			
MARK	DESCRIPTION	APPR.	DATE
1	AS BUILT PLANS	TD	6/10/14

CITY OF HIGHLAND

DESIGNED BY KG | DRAWN BY RA | CHECKED BY MC
SUBMITTED BY TODD DUDLEY
RECOMMENDED BY MOHAN CHAR 10/4/11
MOHAN S. CHAR R.C.E. 57894 EXP. 6-30-14 DATE
APPROVED BY Ernest Wong 10.6.11
ERNEST WONG, CITY ENGINEER R.C.E. 37413 EXP. 6-30-14 DATE

BOULDER AVENUE BRIDGE OVER CITY CREEK (REPLACEMENT)

ABUTMENT 1 LAYOUT

DRAWER NO.

SHEET 6 OF 36

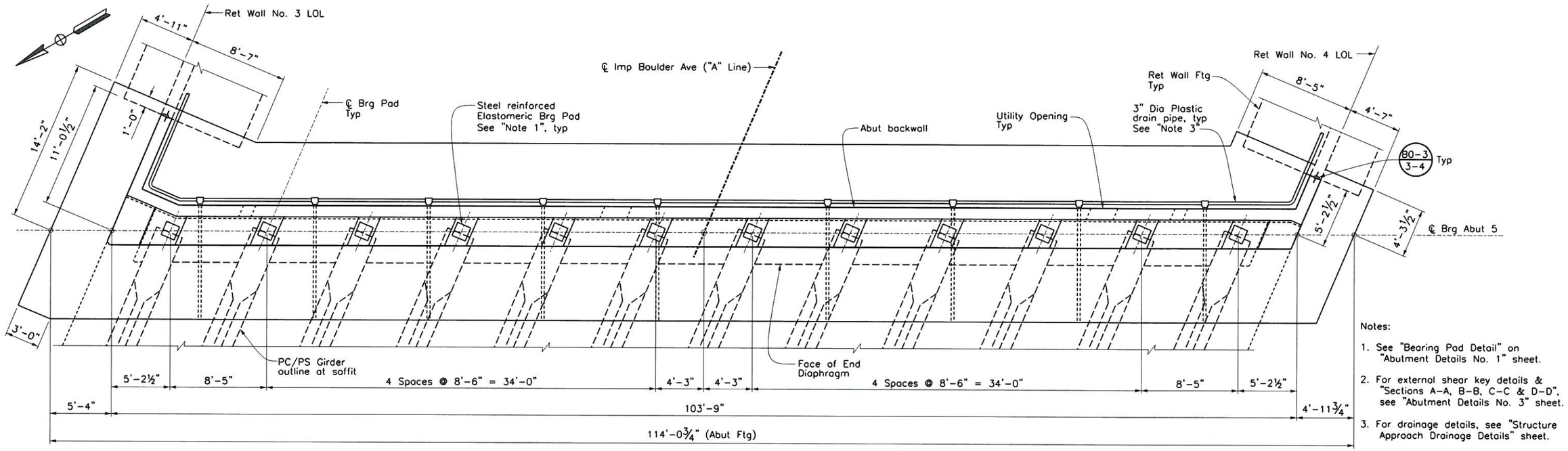

ABUTMENT 5 PLAN

¼" = 1'-0"

Notes:

1. See "Bearing Pad Detail" on "Abutment Details No. 1" sheet.
2. For external shear key details & "Sections A-A, B-B, C-C & D-D", see "Abutment Details No. 3" sheet.
3. For drainage details, see "Structure Approach Drainage Details" sheet.
4. For deck drain layout, see "Girder Layout" & "Utility Details" sheets. Field adjust location as required to match drain pipe location as determined by the Engineer.

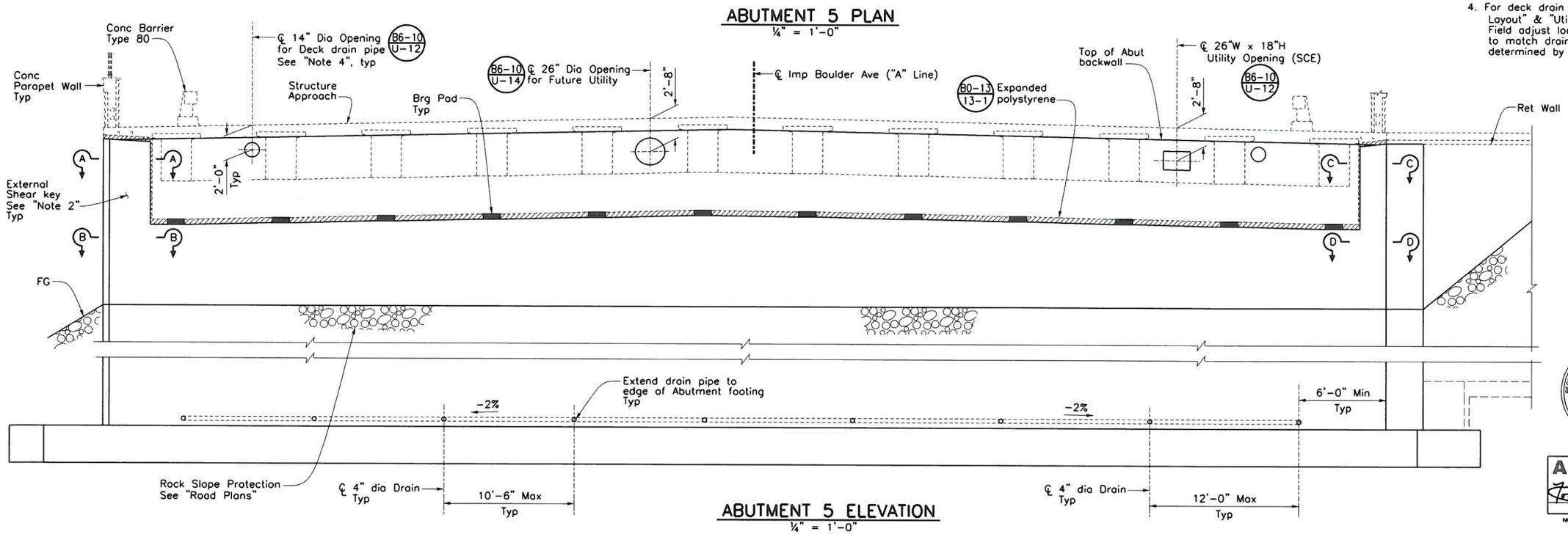

ABUTMENT 5 ELEVATION

¼" = 1'-0"

REGISTERED PROFESSIONAL ENGINEER TODD W. DUDLEY No 39514 EXP. DATE 12/31/13 CIVIL STATE OF CALIFORNIA

AS-BUILT 08/10/14

NO AS-BUILT CHANGES

BENCHMARK

S.P.S.N. 00586
6"x 6" CONC POST WITH DRIVE PIN LOCATED 1 MILE S.E. ALONG S.F.RR FROM RR CROSSING AT BOULDER AVE., AT SOUTH END OF ST. HWY R/W FENCE, 23.5 FT. NORTH OF NORTH RAIL OF RR, 41 FT. EAST OF BOULDER AVE., NORTHBOUND TRAFFIC LANE, 12 FT. NORTH OF CULVERT HEADWALL.
ELEV. = 1353.459'

REGISTERED PROFESSIONAL ENGINEER MOHAN S. CHAR No. 57894 Exp. 6/30/14 CIVIL STATE OF CALIFORNIA

SUBMITTED BY: Mschar DATE: 6-16-11

PLANS PREPARED BY:

AECOM
901 VIA PIEMONTE, 5TH FLOOR
ONTARIO, CALIFORNIA 91764

REVISIONS

MARK	DESCRIPTION	APPR.	DATE
1	AS BUILT PLANS	TD	6/10/14

CITY OF HIGHLAND

DESIGNED BY KG | DRAWN BY RA | CHECKED BY MC
SUBMITTED BY TODD DUDLEY
RECOMMENDED BY MOHAN CHAR 10/4/11
MOHAN S. CHAR DATE
R.C.E. 57894 EXP. 6-30-14

APPROVED BY Ernest Wong 10.6.11
ERNEST WONG, CITY ENGINEER DATE
R.C.E. 37413 EXP. 6-30-14

BOULDER AVENUE BRIDGE OVER CITY CREEK (REPLACEMENT)

ABUTMENT 5 LAYOUT

DRAWER NO.

SHEET 7 OF 36

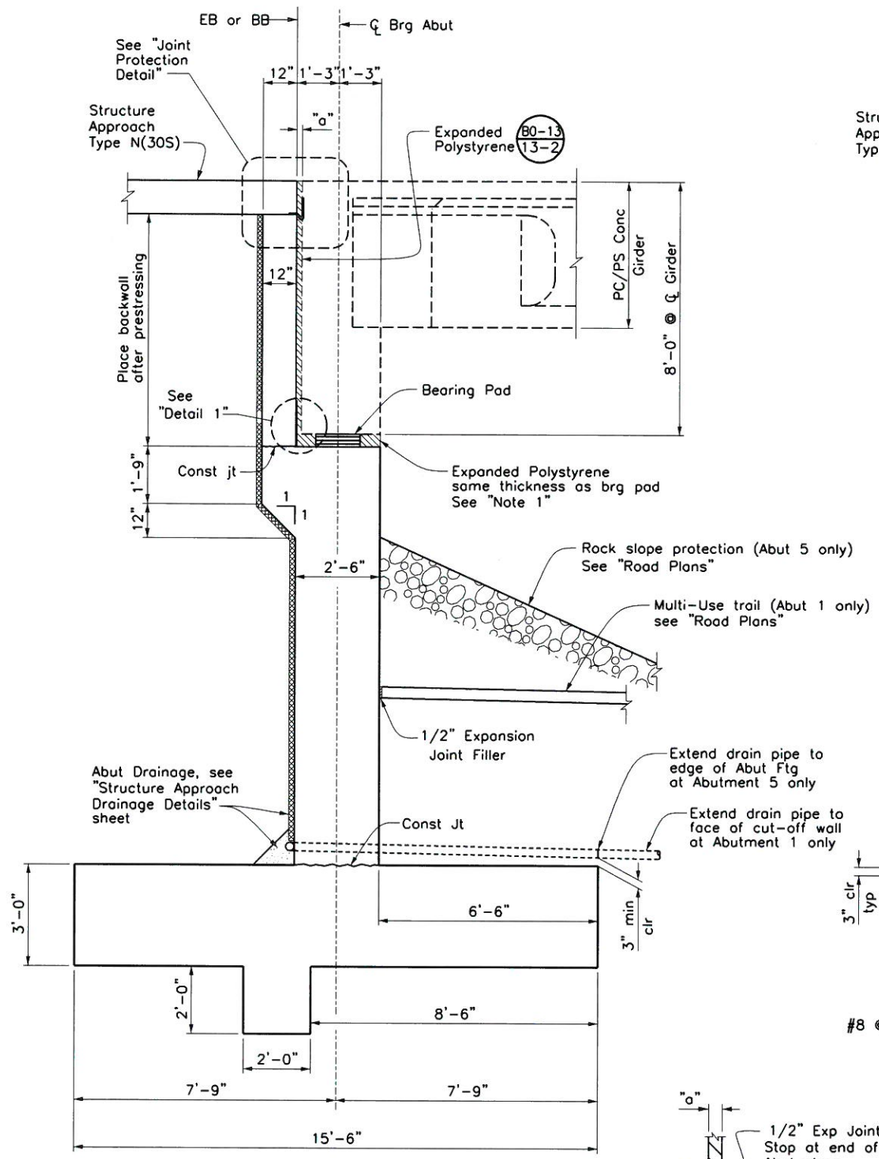

ABUTMENT TYPICAL SECTION

½" = 1'-0"

(Abut 1 shown, Abut 5 similar)

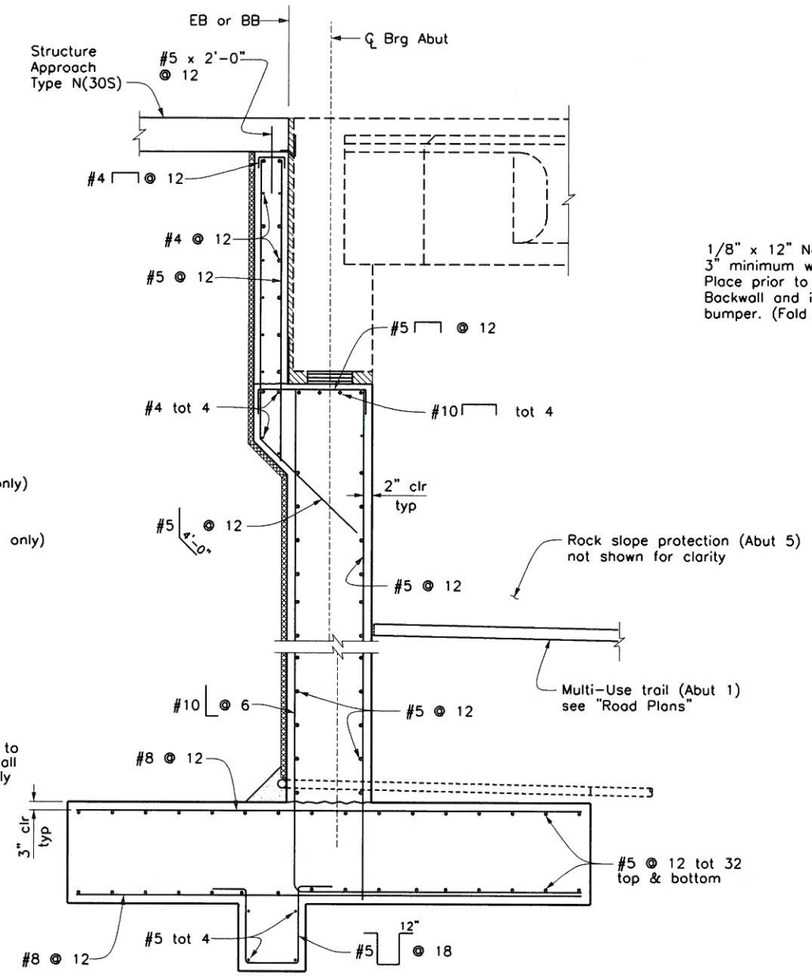

ABUTMENT REINFORCEMENT

½" = 1'-0"

(Abut 1 shown, Abut 5 similar)

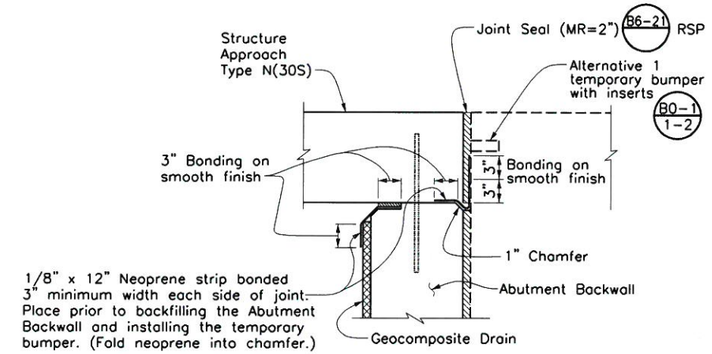

JOINT PROTECTION DETAIL

No Scale

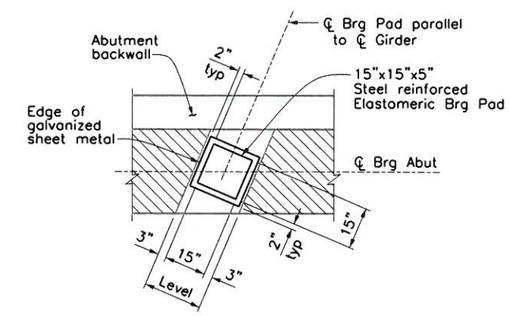

PLAN

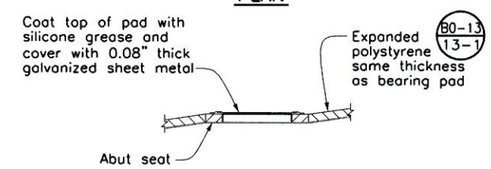

ELEVATION

BEARING PAD DETAIL

No Scale

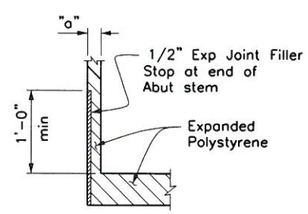

DETAIL 1

No Scale

Note:
For "a" dimension see B6-21 RSP
(Use value corresponding to CIP/PS)

Note:

1. Remove expanded polystyrene minimum of 6" from all exposed surfaces.

REGISTERED PROFESSIONAL ENGINEER TODD W. DUDLEY No 39514 EXP. DATE 12/31/15 CIVIL STATE OF CALIFORNIA

AS-BUILT
Todd W. Dudley 08/10/14
NO AS-BUILT CHANGES

BENCHMARK

S.P.S.N. 00586
6"x 6" CONC POST WITH DRIVE PIN LOCATED 1 MILE S.E. ALONG S.F.RR FROM RR CROSSING AT BOULDER AVE., AT SOUTH END OF ST. HWY R/W FENCE, 23.5 FT. NORTH OF NORTH RAIL OF RR, 41 FT. EAST OF BOULDER AVE., NORTHBOUND TRAFFIC LANE, 12 FT. NORTH OF CULVERT HEADWALL.
ELEV. = 1353.459'

REGISTERED PROFESSIONAL ENGINEER MOHAN S. CHAR No. 57894 Exp. 6/30/14 CIVIL STATE OF CALIFORNIA

SUBMITTED BY: MSchar DATE: 6-16-11

PLANS PREPARED BY:
AECOM
901 VIA PIEMONTE, 5TH FLOOR
ONTARIO, CALIFORNIA 91764

REVISIONS

MARK	DESCRIPTION	APPR.	DATE
1	AS BUILT PLANS	TD	6/10/14

CITY OF HIGHLAND

DESIGNED BY KG | DRAWN BY RA | CHECKED BY MC
SUBMITTED BY TODD DUDLEY
RECOMMENDED BY MOHAN CHAR 10/4/11
MOHAN S. CHAR R.C.E. 57894 EXP. 6-30-14 DATE
APPROVED BY Steve Wong 10.6.11
ERNEST WONG, CITY ENGINEER R.C.E. 37413 EXP. 6-30-14 DATE

BOULDER AVENUE BRIDGE OVER CITY CREEK (REPLACEMENT)

ABUTMENT DETAILS No. 1

DRAWER NO.

SHEET 8 OF 36

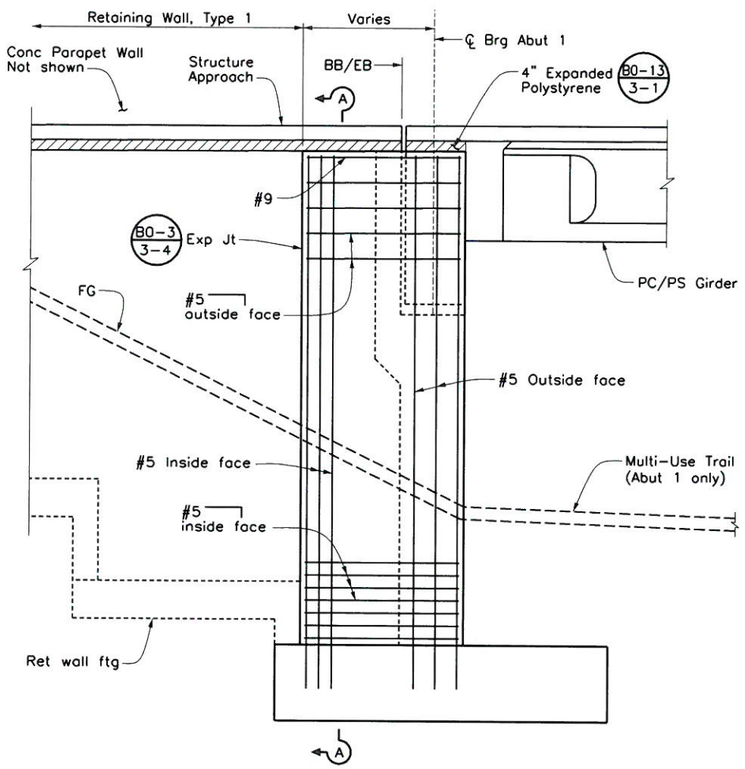

RETURN WALL ELEVATION

3/8" = 1'-0"

(Abut 1 shown, other locations similar)

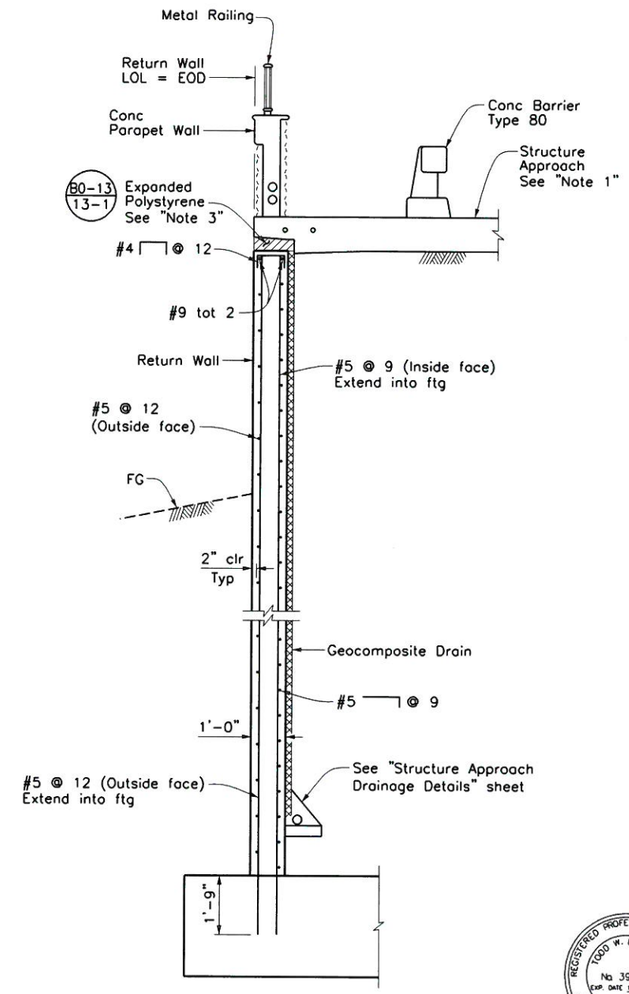

SECTION A–A

1/2" = 1'-0"

Notes:

1. For Structure Approach Details, see "Structure Approach Type N(30S)" sheet.
2. For Drainage Details, see "Structure Approach Drainage Details" sheet.
3. Remove expanded polystyrene minimum of 6" from all exposed surfaces.

REGISTERED PROFESSIONAL ENGINEER
TODD W. DUDLEY
No. 39514
EXP. DATE 12/31/13
CIVIL
STATE OF CALIFORNIA

AS-BUILT
Todd W. Dudley 08/10/14
NO AS-BUILT CHANGES

BENCHMARK

S.P.S.N. 00586
6"x 6" CONC POST WITH DRIVE PIN LOCATED
1 MILE S.E. ALONG S.F.RR FROM RR CROSSING
AT BOULDER AVE., AT SOUTH END OF ST. HWY
R/W FENCE, 23.5 FT. NORTH OF NORTH RAIL OF RR,
41 FT. EAST OF BOULDER AVE., NORTHBOUND
TRAFFIC LANE, 12 FT. NORTH OF CULVERT HEADWALL.
ELEV. = 1353.459'

REGISTERED PROFESSIONAL ENGINEER
MOHAN S. CHAR
No. 57894
Exp. 6/30/14
CIVIL
STATE OF CALIFORNIA

SUBMITTED BY: MSchar
DATE: 6-16-11

PLANS PREPARED BY:
AECOM
901 VIA PIEMONTE, 5TH FLOOR
ONTARIO, CALIFORNIA 91764

REVISIONS

MARK	DESCRIPTION	APPR.	DATE
1	AS BUILT PLANS	TD	6/10/14

CITY OF HIGHLAND

DESIGNED BY KG | DRAWN BY RA | CHECKED BY MC
SUBMITTED BY TODD DUDLEY
RECOMMENDED BY MOHAN CHAR 10/4/11
MOHAN S. CHAR DATE
R.C.E. 57894 EXP. 6-30-14
APPROVED BY Ernest Wong 10.6.11
ERNEST WONG, CITY ENGINEER DATE
R.C.E. 37413 EXP. 6-30-14

BOULDER AVENUE BRIDGE
OVER CITY CREEK (REPLACEMENT)

ABUTMENT DETAILS No. 2

DRAWER NO.

SHEET 9 OF 36

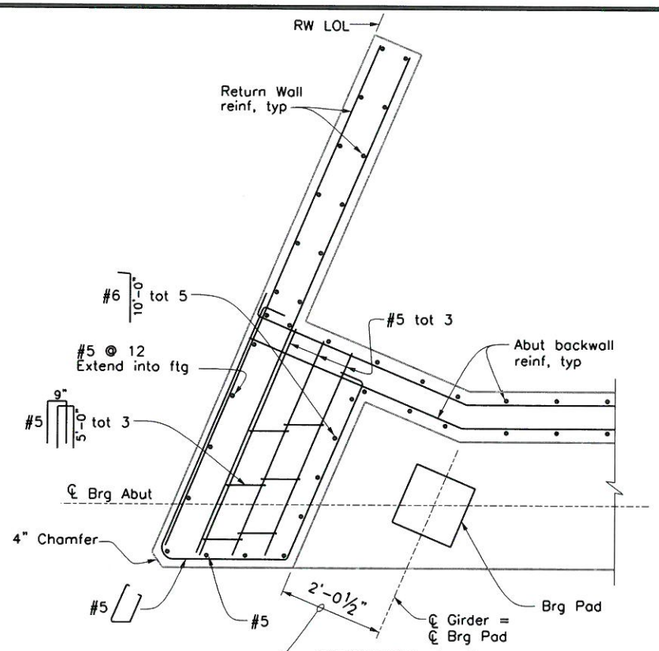

SECTION A-A

¾" = 1'-0"

Abut 1 shown, Abut 5 similar

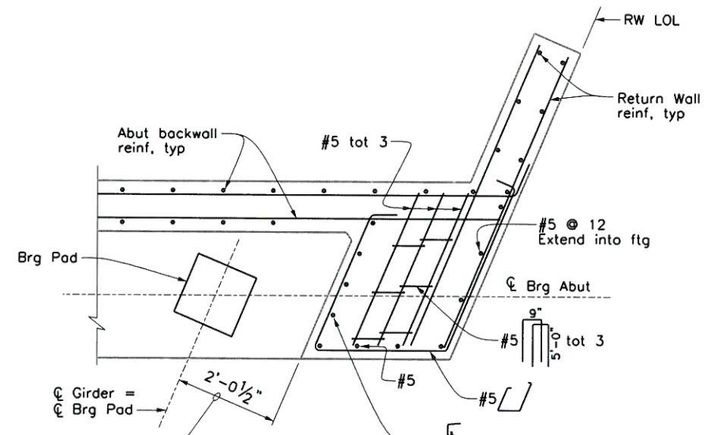

SECTION C-C

¾" = 1'-0"

Abut 1 shown, Abut 5 similar

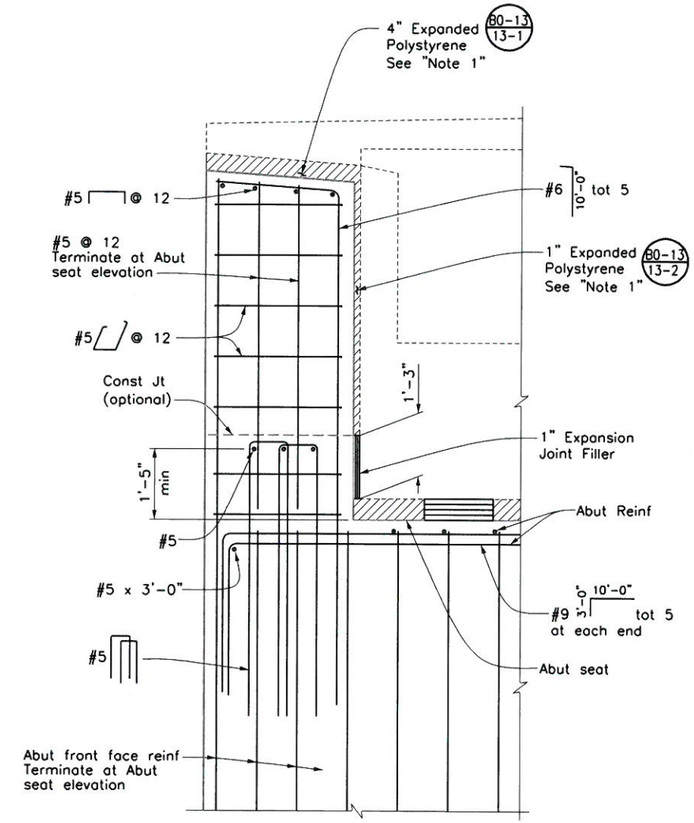

EXTERNAL SHEAR KEY

¾" = 1'-0"

Abut 1 shown, Abut 5 similar

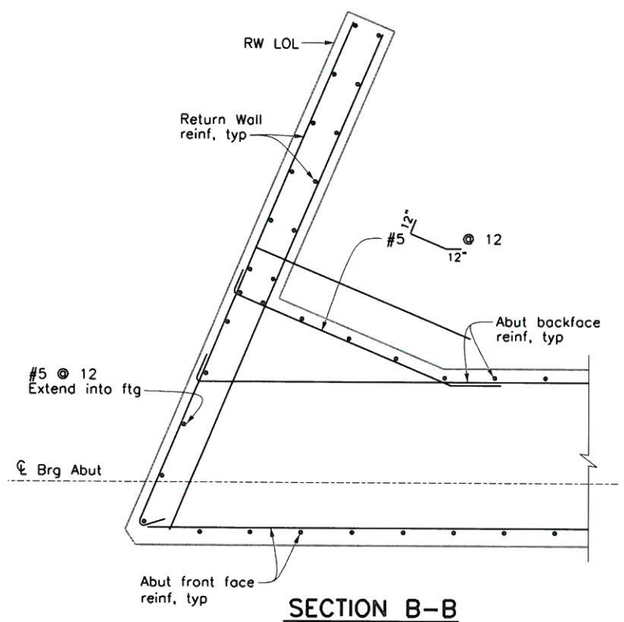

SECTION B-B

¾" = 1'-0"

Abut 1 shown, Abut 5 similar

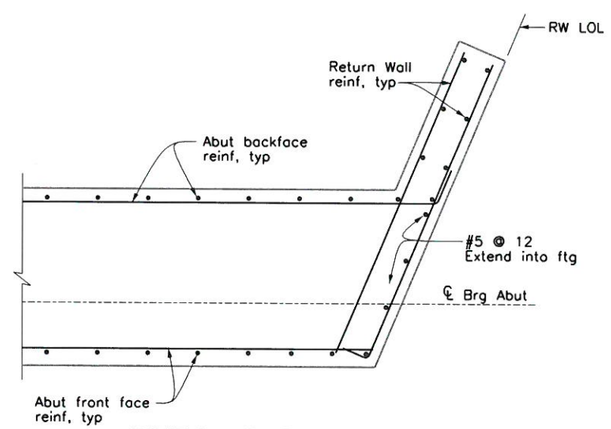

SECTION D-D

¾" = 1'-0"

Abut 1 shown, Abut 5 similar

REGISTERED PROFESSIONAL ENGINEER TODD W. DUDLEY No. 39514 EXP. DATE 12/31/13 CIVIL STATE OF CALIFORNIA

AS-BUILT

08/10/14

NO AS-BUILT CHANGES

Note:

1. Remove expanded polystyrene a minimum of 6" from all exposed surfaces.

BENCHMARK

S.P.S.N. 00586
6'x 6' CONC POST WITH DRIVE PIN LOCATED 1 MILE S.E. ALONG S.F.RR FROM RR CROSSING AT BOULDER AVE., AT SOUTH END OF ST. HWY R/W FENCE, 23.5 FT. NORTH OF NORTH RAIL OF RR, 41 FT. EAST OF BOULDER AVE., NORTHBOUND TRAFFIC LANE, 12 FT. NORTH OF CULVERT HEADWALL.
ELEV. = 1353.459'

REGISTERED PROFESSIONAL ENGINEER MOHAN S. CHAR No. 57894 Exp. 6/30/14 CIVIL STATE OF CALIFORNIA

SUBMITTED BY: DATE: 6-16-11

PLANS PREPARED BY:

AECOM
901 VIA PIEMONTE, 5TH FLOOR
ONTARIO, CALIFORNIA 91764

REVISIONS			
MARK	DESCRIPTION	APPR.	DATE
1	AS BUILT PLANS	TD	6/10/14

CITY OF HIGHLAND

DESIGNED BY KG | DRAWN BY RA | CHECKED BY MC
SUBMITTED BY TODD DUDLEY
RECOMMENDED BY MOHAN CHAR 10/4/11
MOHAN S. CHAR DATE R.C.E. 57894 EXP. 6-30-14
APPROVED BY 10.6.11
ERNEST WONG, CITY ENGINEER DATE R.C.E. 37413 EXP. 6-30-14

BOULDER AVENUE BRIDGE OVER CITY CREEK (REPLACEMENT)

ABUTMENT DETAILS No. 3

DRAWER NO.

SHEET 10 OF 36

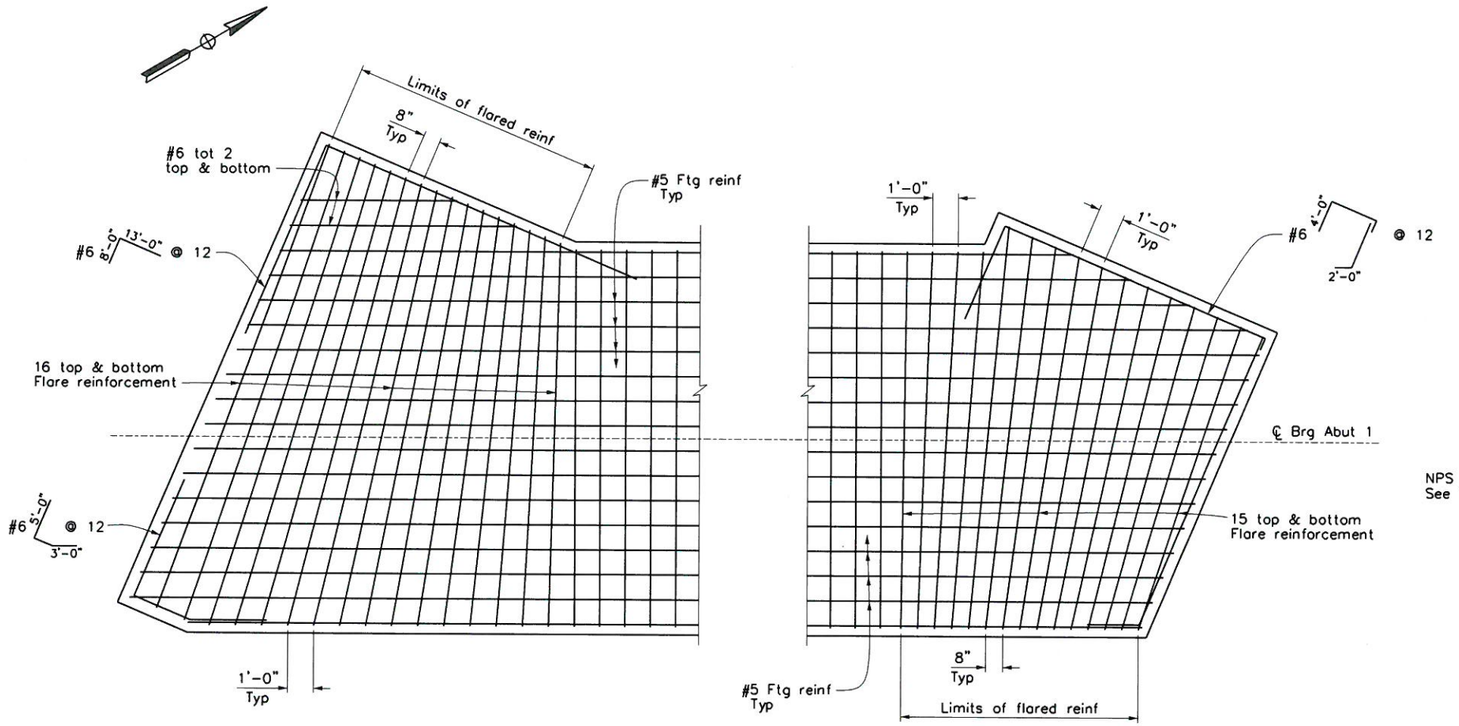

ABUTMENT FOOTING CORNER DETAILS

⅜ "= 1'-0"

(Abut 1 shown, Abut 5 similar)

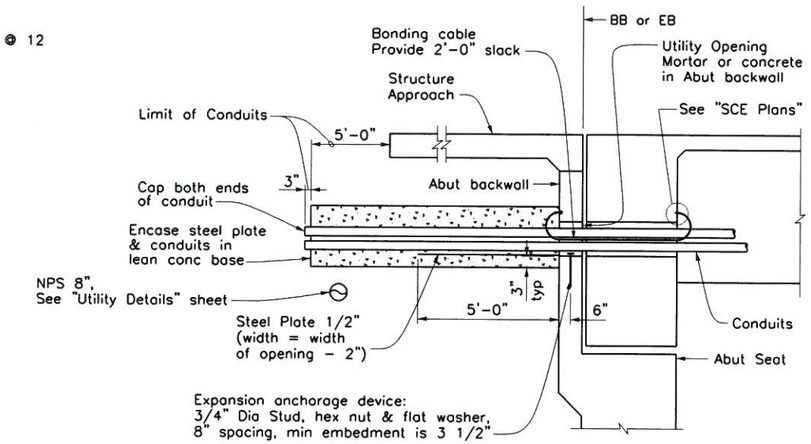

CONDUIT INSTALLATION DETAILS

No Scale

(Shown for Contractor information only, see "SCE Note 1")

SCE Notes:

1. See "SCE Plans" for conduit installation details at Abutments.
2. Contractor shall inform SCE Inspector 4 weeks in advance of any construction activities affecting SCE existing or planned facilities.
3. Contractor shall allow 1 week construction window at each Abutment for conduit installation at Abutments after backfill and prior to approach slab construction.
4. Field adjust to avoid conflicts as approved by the Engineer and SCE Inspector.

REGISTERED PROFESSIONAL ENGINEER TODD W. DUDLEY No. 39514 EXP. DATE 12/31/13 CIVIL STATE OF CALIFORNIA

AS-BUILT
05/10/14
NO AS-BUILT CHANGES

BENCHMARK

S.P.S.N. 00586
6"x 6' CONC POST WITH DRIVE PIN LOCATED 1 MILE S.E. ALONG S.F.RR FROM RR CROSSING AT BOULDER AVE., AT SOUTH END OF ST. HWY R/W FENCE, 23.5 FT. NORTH OF NORTH RAIL OF RR, 41 FT. EAST OF BOULDER AVE., NORTHBOUND TRAFFIC LANE, 12 FT. NORTH OF CULVERT HEADWALL.
ELEV. = 1353.459'

REGISTERED PROFESSIONAL ENGINEER MOHAN S. CHAR No. 57894 Exp. 6/30/14 CIVIL STATE OF CALIFORNIA

SUBMITTED BY: DATE: 6-16-11

PLANS PREPARED BY:

AECOM
901 VIA PIEMONTE, 5TH FLOOR
ONTARIO, CALIFORNIA 91764

REVISIONS			
MARK	DESCRIPTION	APPR.	DATE
1	AS BUILT PLANS	TD	6/10/14

CITY OF HIGHLAND

DESIGNED BY KG | DRAWN BY RA | CHECKED BY MC
SUBMITTED BY TODD DUDLEY
RECOMMENDED BY MOHAN CHAR 10/4/11
MOHAN S. CHAR R.C.E. 57894 EXP. 6-30-14 DATE
APPROVED BY 10.6.11
ERNEST WONG, CITY ENGINEER R.C.E. 37413 EXP. 6-30-14 DATE

BOULDER AVENUE BRIDGE OVER CITY CREEK (REPLACEMENT)

ABUTMENT DETAILS No. 4

DRAWER NO.

SHEET 11 OF 36

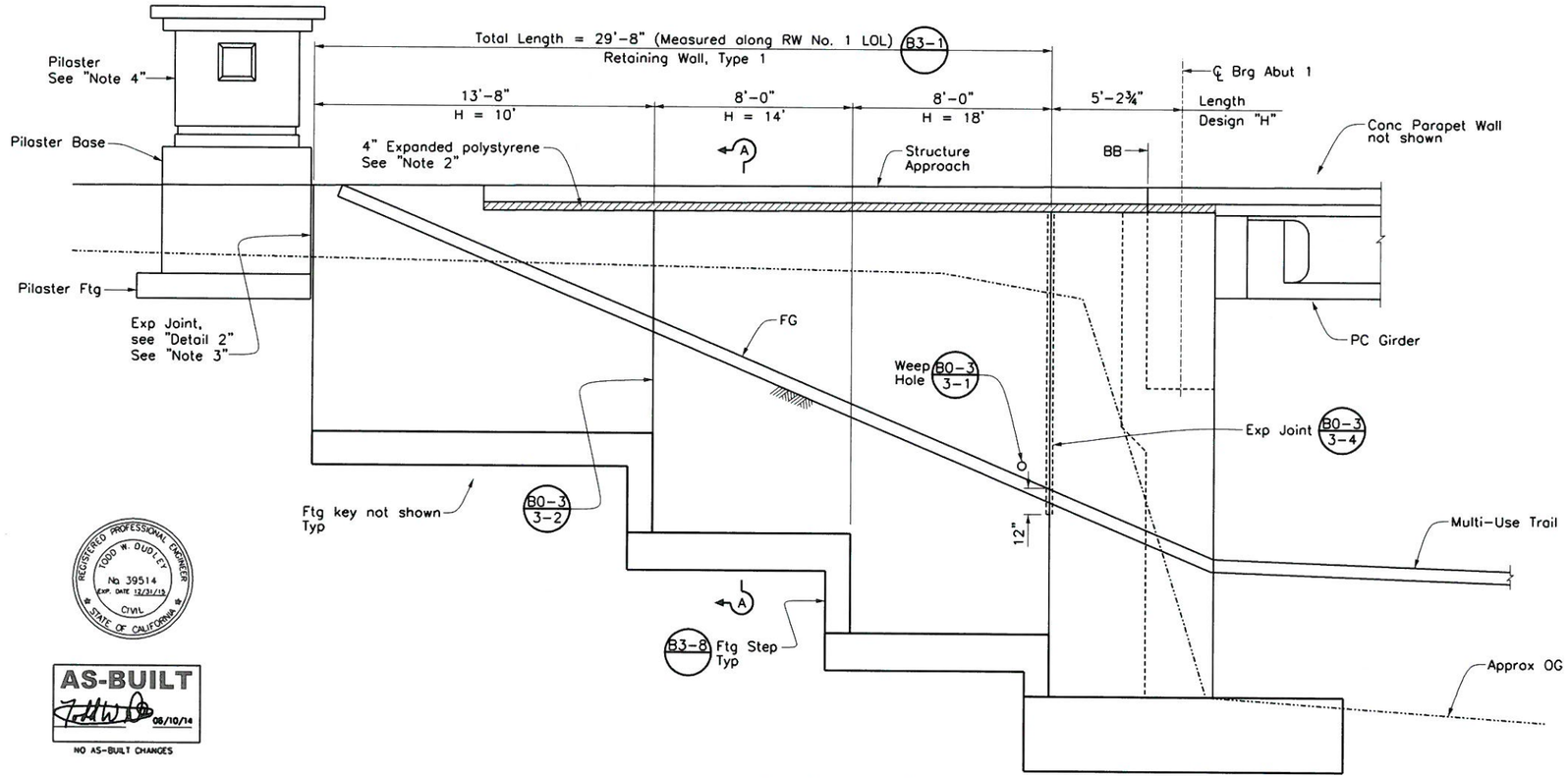

MIRROR ELEVATION

⅜" = 1'-0"

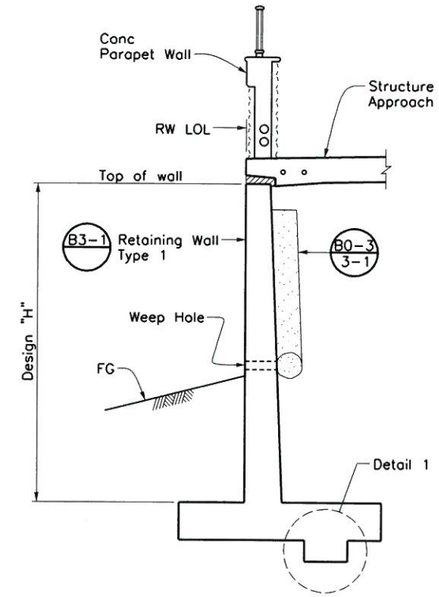

SECTION A-A

No Scale

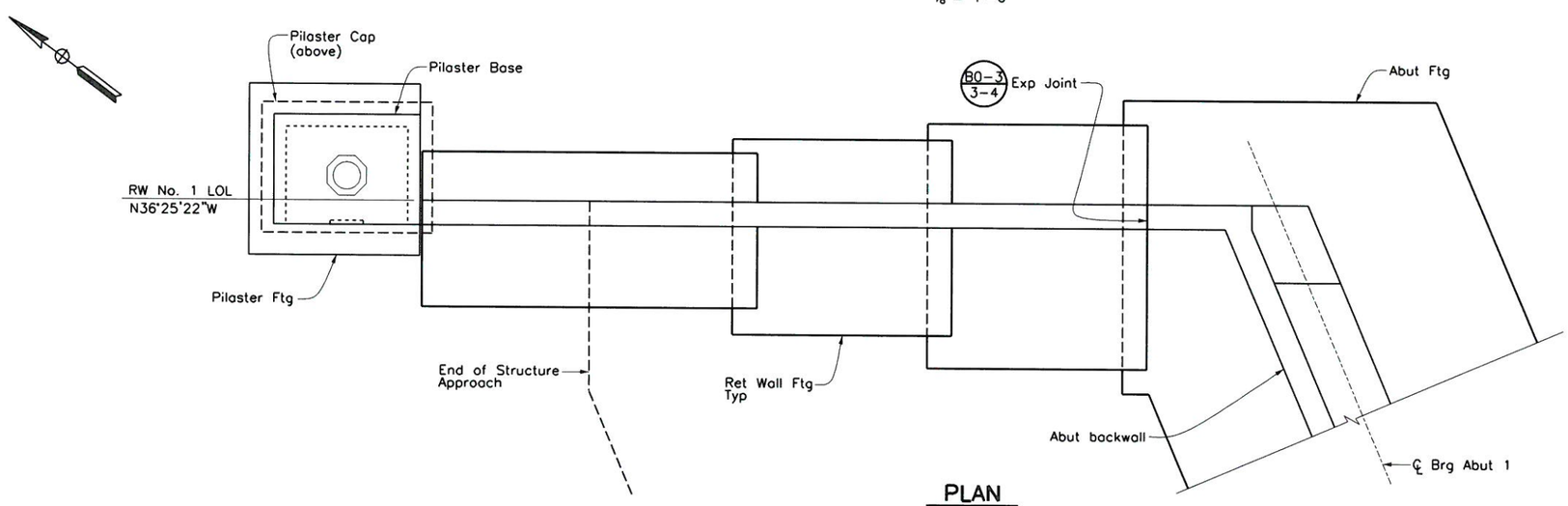

PLAN

⅜" = 1'-0"

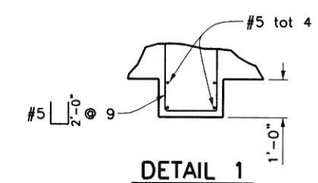

DETAIL 1

No Scale

Reinf shown is in addition to B3-1

Notes:

1. For bottom of footing elevations, see "Foundation Plan" sheet.
2. Remove expanded polystyrene a minimum of 6" from all exposed surfaces no less than 7 days after deck/approach slab has been placed.
3. For "Detail 2", see "Retaining Wall No. 2 Layout" sheet.
4. For Pilaster details, see "Pilaster Details" sheet.

REGISTERED PROFESSIONAL ENGINEER TODD W. DUDLEY No 39514 EXP. DATE 12/31/13 CIVIL STATE OF CALIFORNIA

AS-BUILT 06/10/14

NO AS-BUILT CHANGES

BENCHMARK

S.P.S.N. 00586
6"x 6" CONC POST WITH DRIVE PIN LOCATED 1 MILE S.E. ALONG S.F.RR FROM RR CROSSING AT BOULDER AVE., AT SOUTH END OF ST. HWY R/W FENCE, 23.5 FT. NORTH OF NORTH RAIL OF RR, 41 FT. EAST OF BOULDER AVE., NORTHBOUND TRAFFIC LANE, 12 FT. NORTH OF CULVERT HEADWALL.
ELEV. = 1353.459'

REGISTERED PROFESSIONAL ENGINEER MOHAN S. CHAR No. 57894 Exp. 6/30/14 CIVIL STATE OF CALIFORNIA

SUBMITTED BY: MSchar DATE: 6-16-11

PLANS PREPARED BY:

AECOM
901 VIA PIEMONTE, 5TH FLOOR
ONTARIO, CALIFORNIA 91764

REVISIONS

MARK	DESCRIPTION	APPR.	DATE
1	AS BUILT PLANS	TD	6/10/14

CITY OF HIGHLAND

DESIGNED BY KG | DRAWN BY RA | CHECKED BY MC
SUBMITTED BY TODD DUDLEY
RECOMMENDED BY MOHAN CHAR 10/4/11
MOHAN S. CHAR R.C.E. 57894 EXP. 6-30-14 DATE
APPROVED BY Ernest Wong 10.6.11
ERNEST WONG, CITY ENGINEER R.C.E. 37413 EXP. 6-30-14 DATE

BOULDER AVENUE BRIDGE OVER CITY CREEK (REPLACEMENT)

RETAINING WALL No. 1 LAYOUT

DRAWER NO.

SHEET 12 OF 36

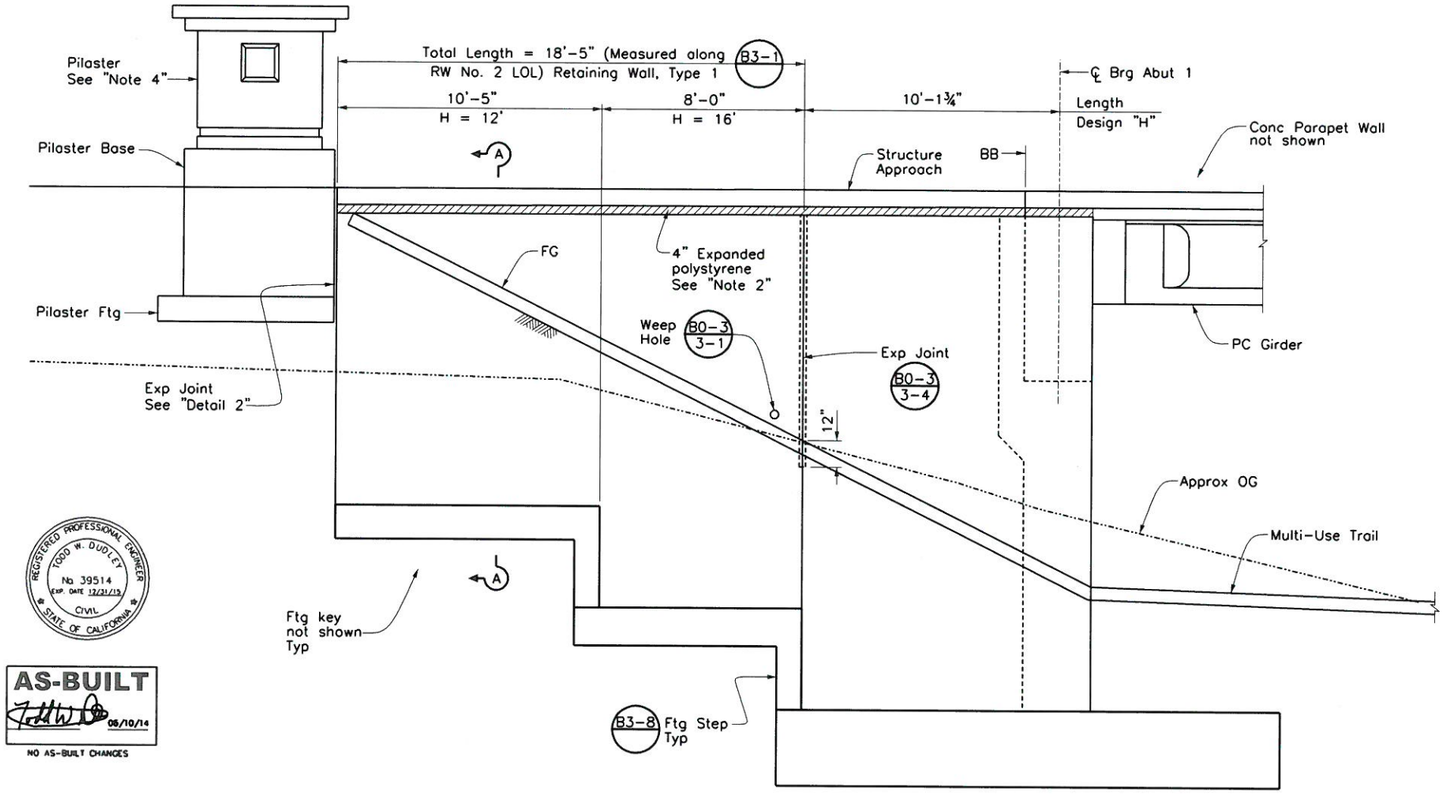

ELEVATION

⅜" = 1'-0"

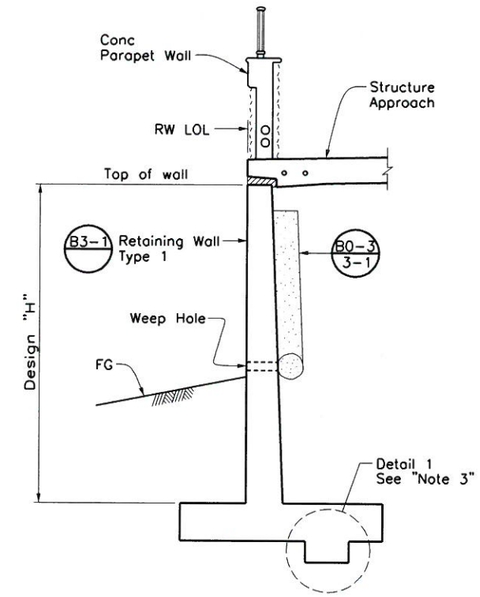

SECTION A-A

No Scale

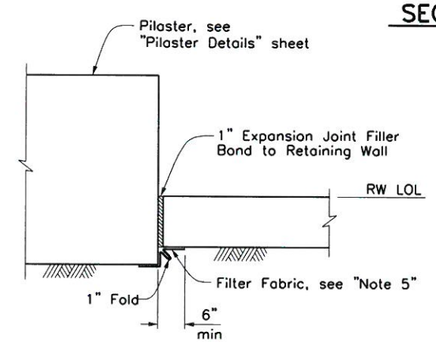

DETAIL 2

No Scale

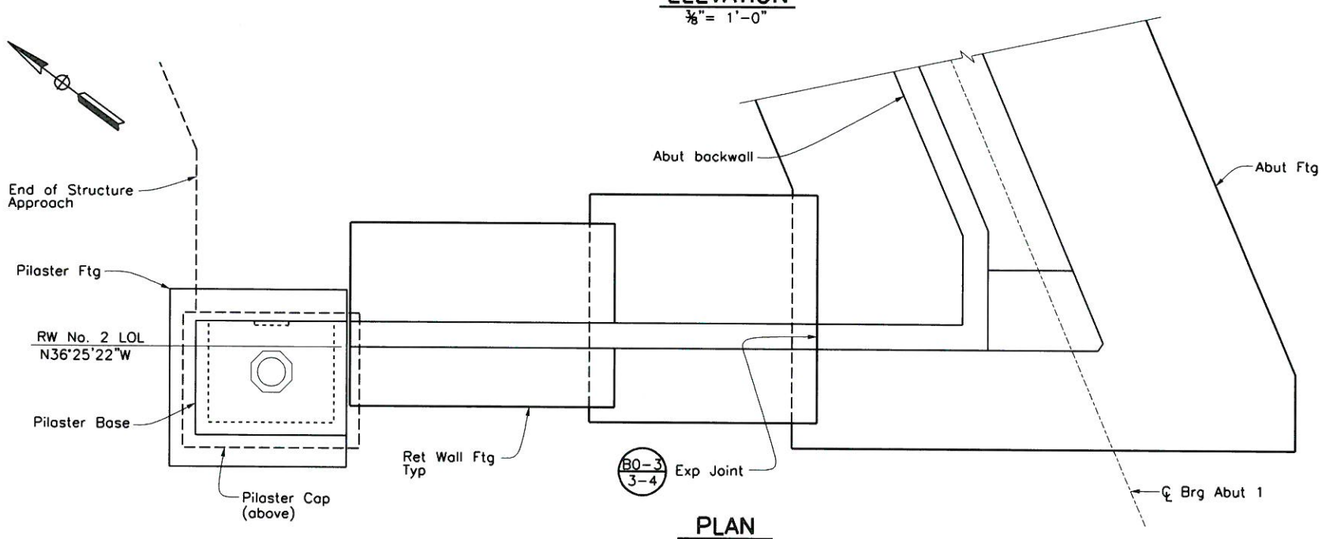

PLAN

⅜" = 1'-0"

Notes:

1. For bottom of footing elevations, see "Foundation Plan" sheet.
2. Remove expanded polystyrene a minimum of 6" from all exposed surfaces no less than 7 days after deck/approach slab has been placed.
3. For "Detail 1", see "Retaining Wall No. 1 Layout" sheet.
4. For Pilaster details, see "Pilaster Details" sheet.
5. Place 18" wide strip of filter fabric bonded to back side of Retaining Wall and Pilaster for entire length of joint.

REGISTERED PROFESSIONAL ENGINEER TODD W. DUDLEY No 39514 EXP. DATE 12/31/15 CIVIL STATE OF CALIFORNIA

AS-BUILT
06/10/14
NO AS-BUILT CHANGES

BENCHMARK

S.P.S.N. 00586
6"x 6" CONC POST WITH DRIVE PIN LOCATED 1 MILE S.E. ALONG S.F.RR FROM RR CROSSING AT BOULDER AVE., AT SOUTH END OF ST. HWY R/W FENCE, 23.5 FT. NORTH OF NORTH RAIL OF RR, 41 FT. EAST OF BOULDER AVE., NORTHBOUND TRAFFIC LANE, 12 FT. NORTH OF CULVERT HEADWALL.
ELEV. = 1353.459'

REGISTERED PROFESSIONAL ENGINEER MOHAN S. CHAR No. 57894 Exp. 6/30/14 CIVIL STATE OF CALIFORNIA

SUBMITTED BY: MSchar
DATE: 6-16-11

PLANS PREPARED BY:
AECOM
901 VIA PIEMONTE, 5TH FLOOR
ONTARIO, CALIFORNIA 91764

REVISIONS

MARK	DESCRIPTION	APPR.	DATE
1	AS BUILT PLANS	TD	6/10/14

CITY OF HIGHLAND

DESIGNED BY KG | DRAWN BY RA | CHECKED BY MC
SUBMITTED BY TODD DUDLEY
RECOMMENDED BY MOHAN CHAR 10/4/11
MOHAN S. CHAR R.C.E. 57894 EXP. 6-30-14 DATE
APPROVED BY ERNEST WONG, CITY ENGINEER R.C.E. 37413 EXP. 6-30-14 DATE 10.6.11

BOULDER AVENUE BRIDGE OVER CITY CREEK (REPLACEMENT)

RETAINING WALL No. 2 LAYOUT

DRAWER NO.

SHEET 13 OF 36

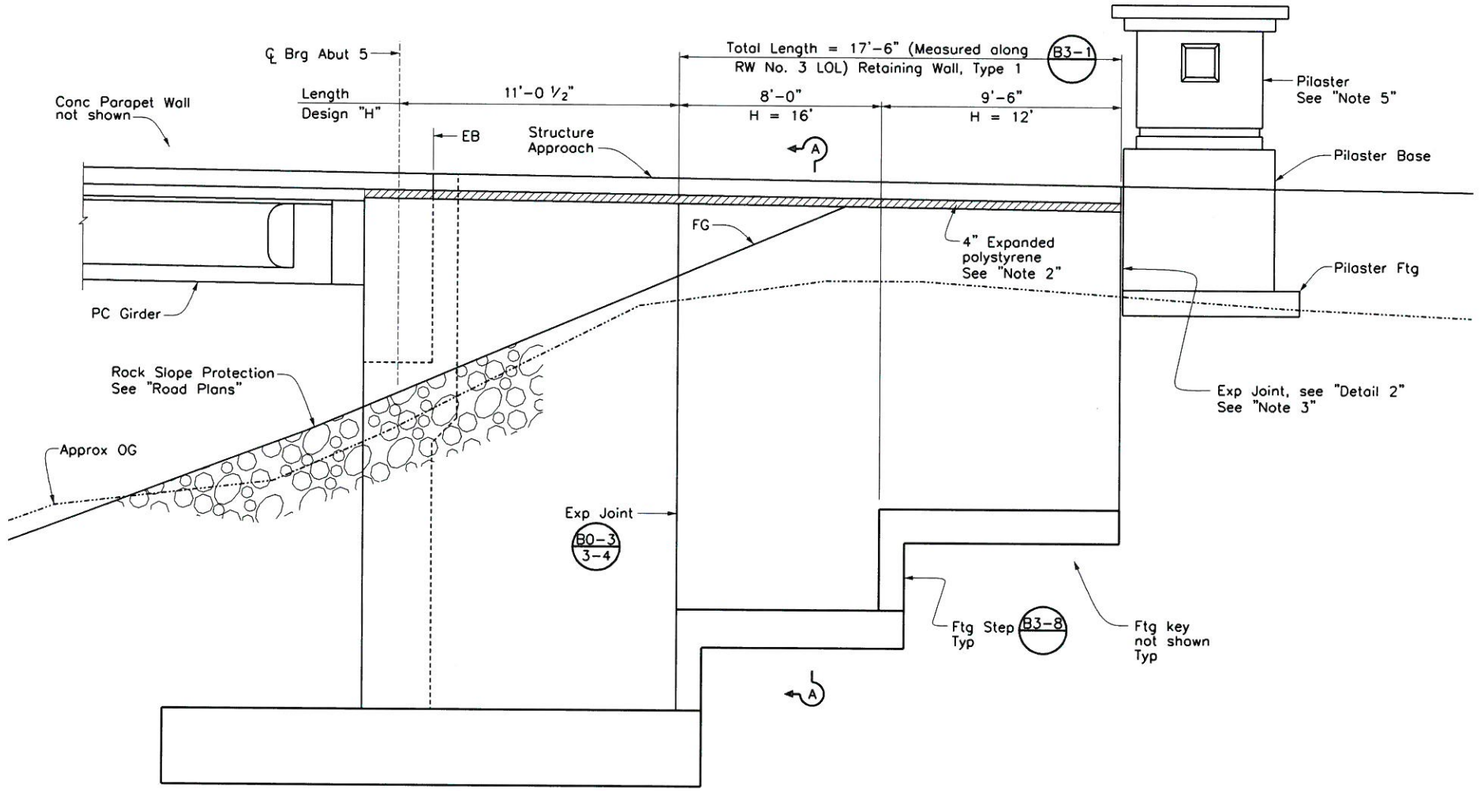

MIRROR ELEVATION

⅜" = 1'-0"

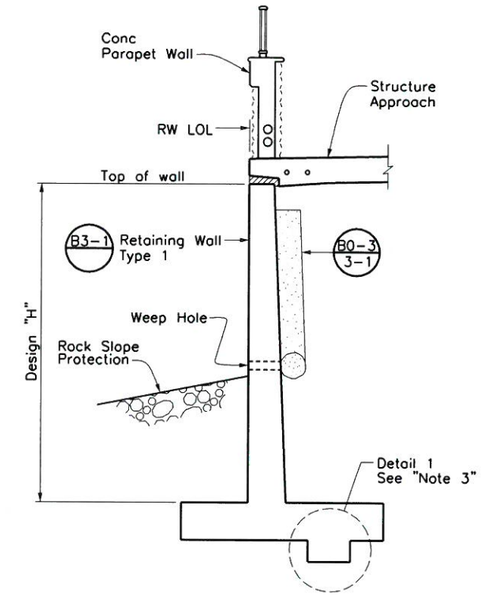

SECTION A-A

No Scale

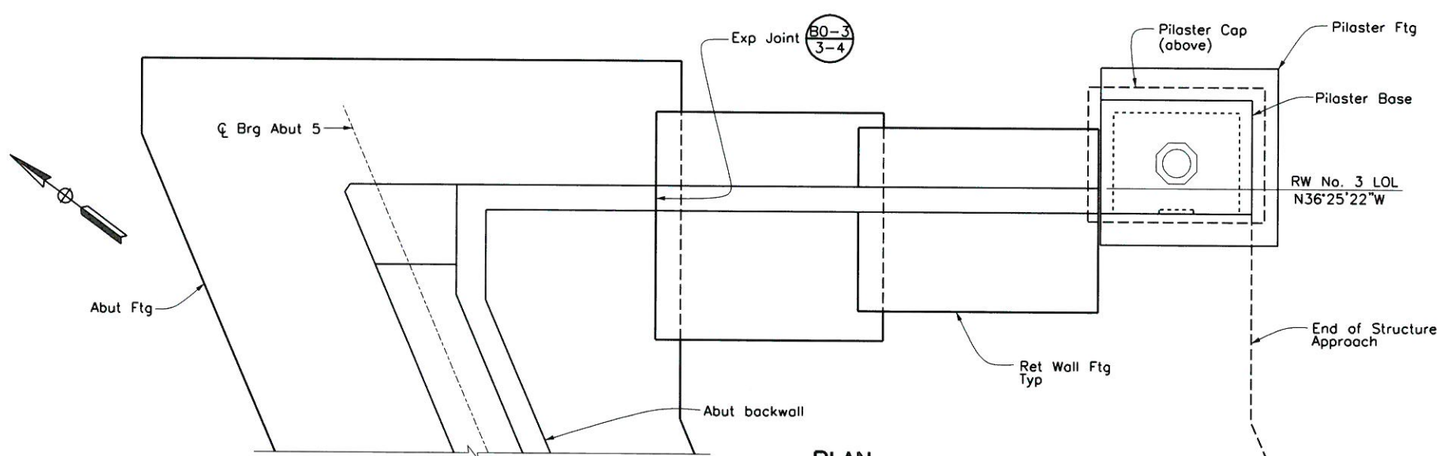

PLAN

⅜" = 1'-0"

Notes:

1. For bottom of footing elevations, see "Foundation Plan" sheet.
2. Remove expanded polystyrene a minimum of 6" from all exposed surfaces no less than 7 days after deck/approach slab has been placed.
3. For "Detail 1", see "Retaining Wall No. 1 Layout" sheet.
4. For "Detail 2", see "Retaining Wall No. 2 Layout" sheet.
5. For Pilaster details, see "Pilaster Details" sheet.

REGISTERED PROFESSIONAL ENGINEER TODD W. DUDLEY No. 39514 EXP. DATE 12/31/12 CIVIL STATE OF CALIFORNIA

AS-BUILT
Todd W. Dudley 08/10/14
NO AS-BUILT CHANGES

BENCHMARK

S.P.S.N. 00586
6"x 6" CONC POST WITH DRIVE PIN LOCATED 1 MILE S.E. ALONG S.F.RR FROM RR CROSSING AT BOULDER AVE., AT SOUTH END OF ST. HWY R/W FENCE, 23.5 FT. NORTH OF NORTH RAIL OF RR, 41 FT. EAST OF BOULDER AVE., NORTHBOUND TRAFFIC LANE, 12 FT. NORTH OF CULVERT HEADWALL.
ELEV. = 1353.459'

REGISTERED PROFESSIONAL ENGINEER MOHAN S. CHAR No. 57894 Exp. 6/30/14 CIVIL STATE OF CALIFORNIA

SUBMITTED BY: MSchar DATE: 6-16-11

PLANS PREPARED BY:
AECOM
901 VIA PIEMONTE, 5TH FLOOR
ONTARIO, CALIFORNIA 91764

REVISIONS

MARK	DESCRIPTION	APPR.	DATE
1	AS BUILT PLANS	TD	6/10/14

CITY OF HIGHLAND

DESIGNED BY KG | DRAWN BY RA | CHECKED BY MC
SUBMITTED BY TODD DUDLEY
RECOMMENDED BY MOHAN CHAR 10/4/11
MOHAN S. CHAR R.C.E. 57894 DATE EXP. 6-30-14
APPROVED BY ERNEST WONG, CITY ENGINEER R.C.E. 37413 DATE 10.6.11 EXP. 6-30-14

BOULDER AVENUE BRIDGE OVER CITY CREEK (REPLACEMENT)

RETAINING WALL No. 3 LAYOUT

DRAWER NO.

SHEET 14 OF 36

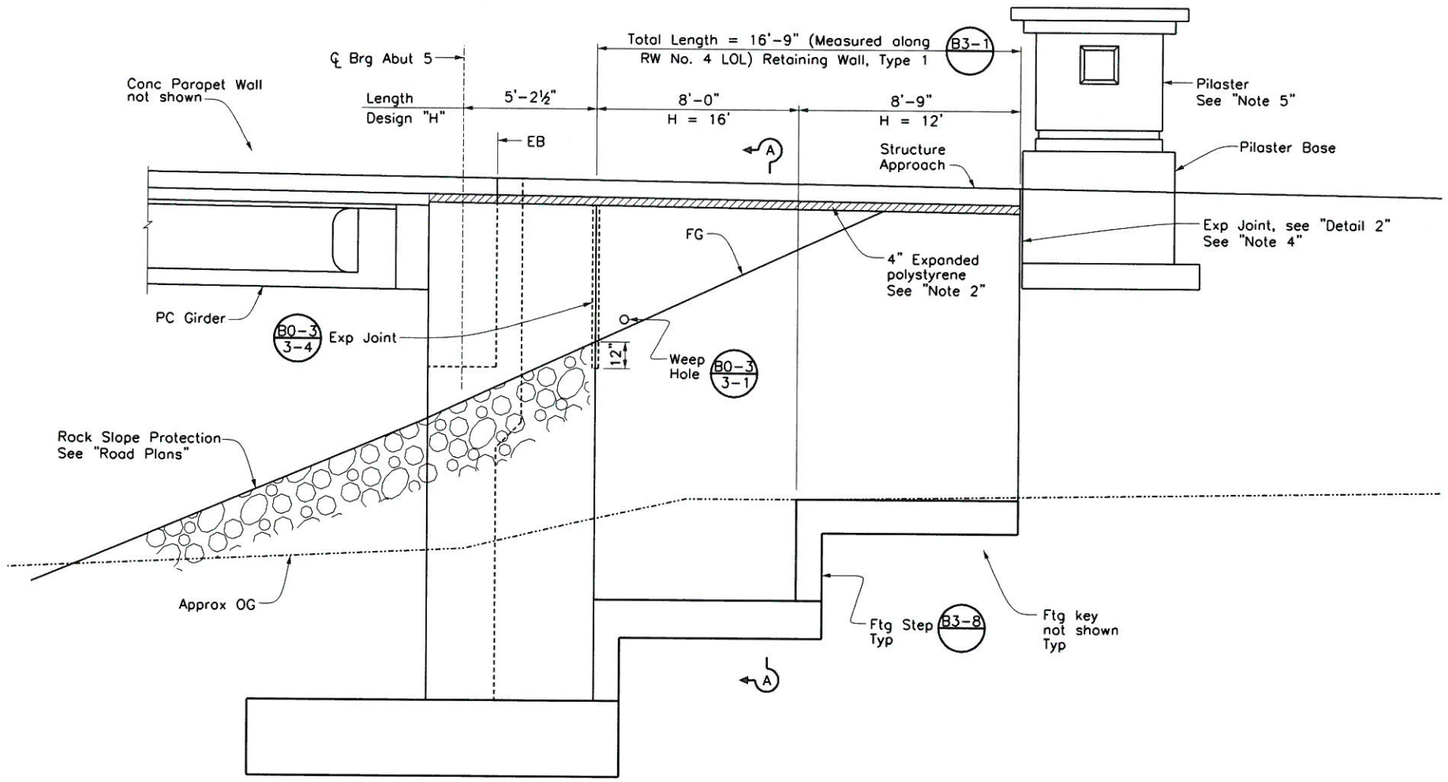

ELEVATION

⅜" = 1'-0"

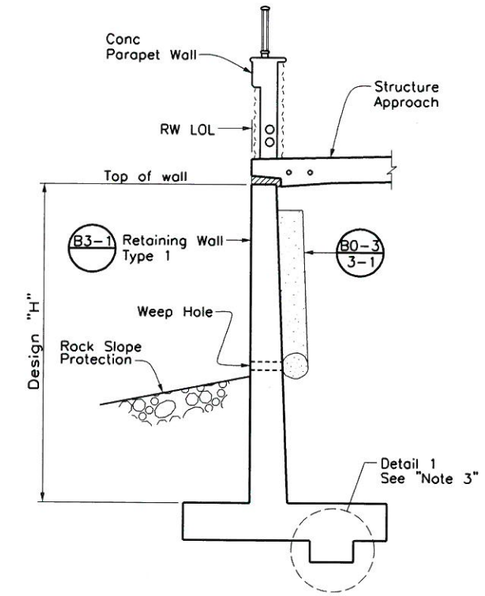

SECTION A-A

No Scale

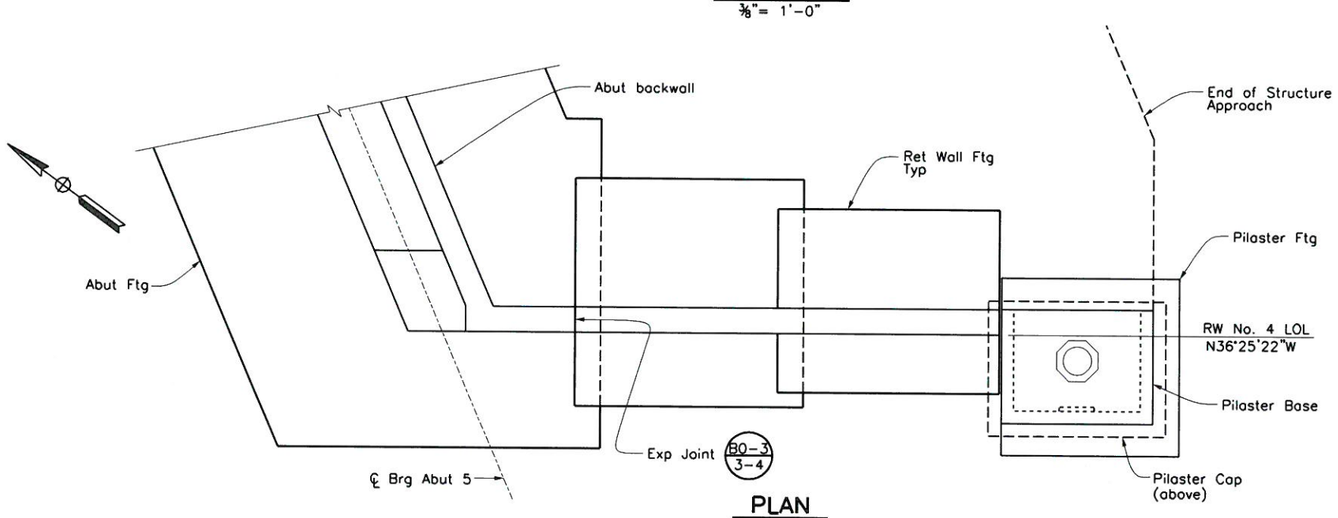

PLAN

⅜" = 1'-0"

Notes:

1. For bottom of footing elevations, see "Foundation Plan" sheet.
2. Remove expanded polystyrene a minimum of 6" from all exposed surfaces no less than 7 days after deck/approach slab has been placed.
3. For "Detail 1", see "Retaining Wall No. 1 Layout" sheet.
4. For "Detail 2", see "Retaining Wall No. 2 Layout" sheet.
5. For Pilaster details, see "Pilaster Details" sheet.

REGISTERED PROFESSIONAL ENGINEER TODD W. DUDLEY No 39514 EXP. DATE 12/31/13 CIVIL STATE OF CALIFORNIA

AS-BUILT
Todd W. Dudley 05/10/14
NO AS-BUILT CHANGES

BENCHMARK

S.P.S.N. 00586
6"x 6" CONC POST WITH DRIVE PIN LOCATED 1 MILE S.E. ALONG S.F.RR FROM RR CROSSING AT BOULDER AVE., AT SOUTH END OF ST. HWY R/W FENCE, 23.5 FT. NORTH OF NORTH RAIL OF RR, 41 FT. EAST OF BOULDER AVE., NORTHBOUND TRAFFIC LANE, 12 FT. NORTH OF CULVERT HEADWALL.
ELEV. = 1353.459'

REGISTERED PROFESSIONAL ENGINEER MOHAN S. CHAR No. 57894 Exp. 6/30/14 CIVIL STATE OF CALIFORNIA

SUBMITTED BY: MSchar DATE: 6-16-11

PLANS PREPARED BY:
AECOM
901 VIA PIEMONTE, 5TH FLOOR
ONTARIO, CALIFORNIA 91764

REVISIONS

MARK	DESCRIPTION	APPR.	DATE
1	AS BUILT PLANS	TD	6/10/14

CITY OF HIGHLAND

DESIGNED BY KG | DRAWN BY RA | CHECKED BY MC
SUBMITTED BY TODD DUDLEY
RECOMMENDED BY MOHAN CHAR 10/4/11
MOHAN S. CHAR R.C.E. 57894 EXP. 6-30-14 DATE
APPROVED BY Ernest Wong 10.6.11
ERNEST WONG, CITY ENGINEER R.C.E. 37413 EXP. 6-30-14 DATE

BOULDER AVENUE BRIDGE OVER CITY CREEK (REPLACEMENT)

RETAINING WALL No. 4 LAYOUT

DRAWER NO.

SHEET 15 OF 36

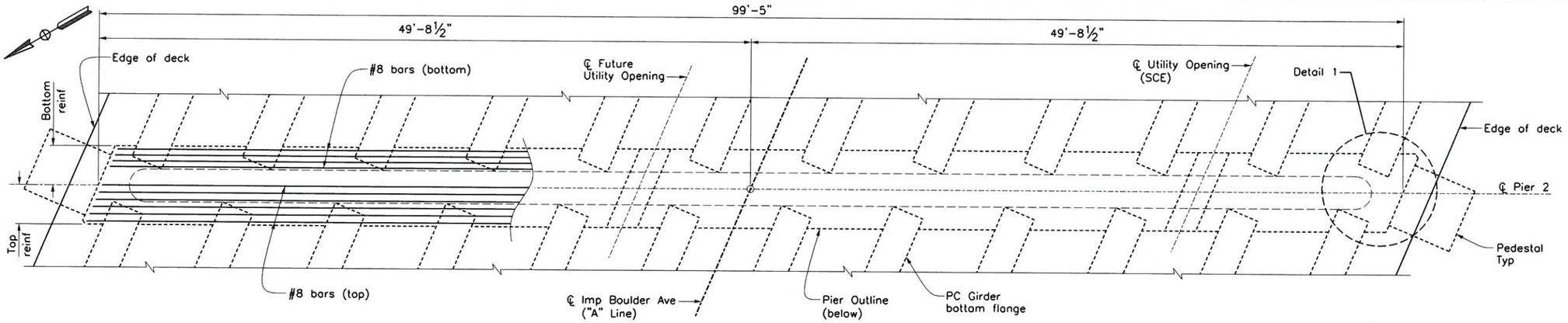

PLAN

1/4" = 1'-0"

(Pier 2 shown, Piers 3 & 4 similar)

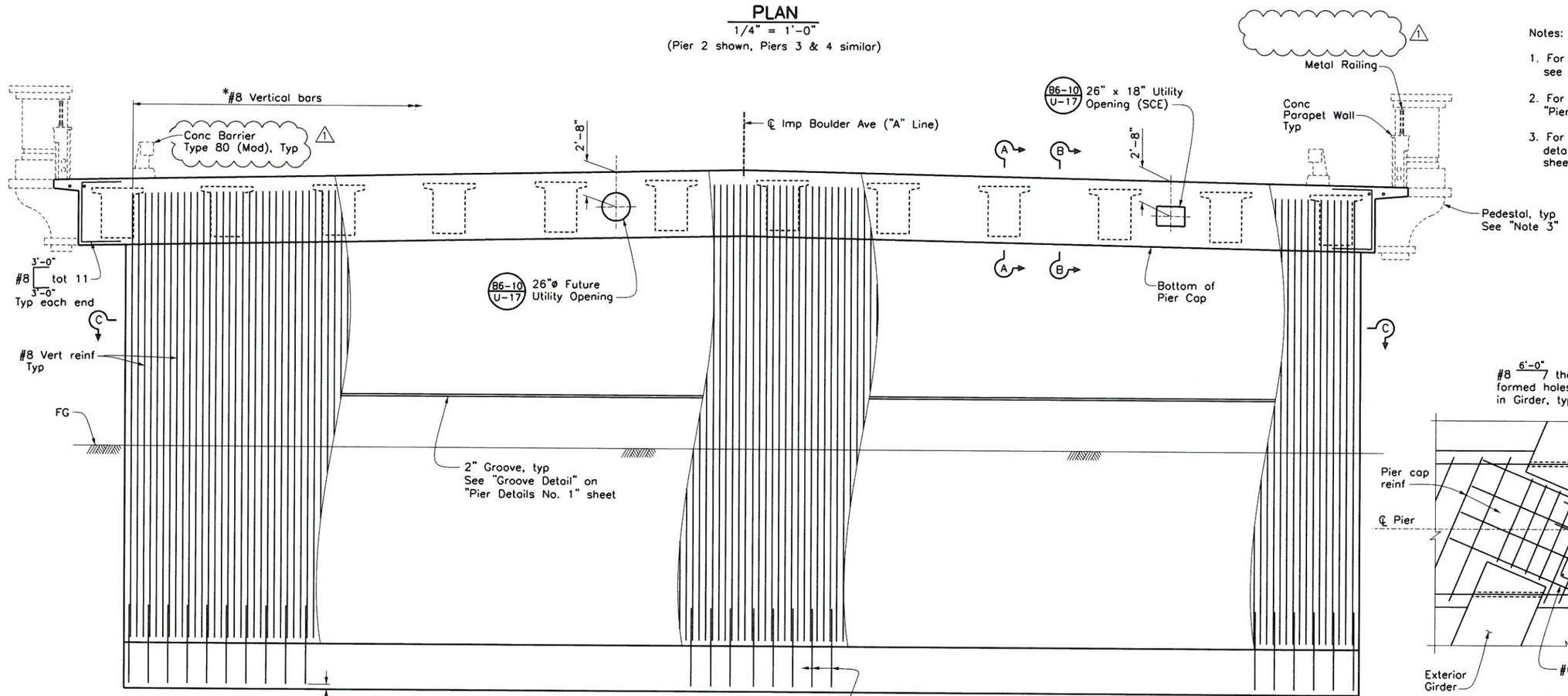

* Note:
Adjust as needed to clear utility opening

ELEVATION

1/4" = 1'-0"

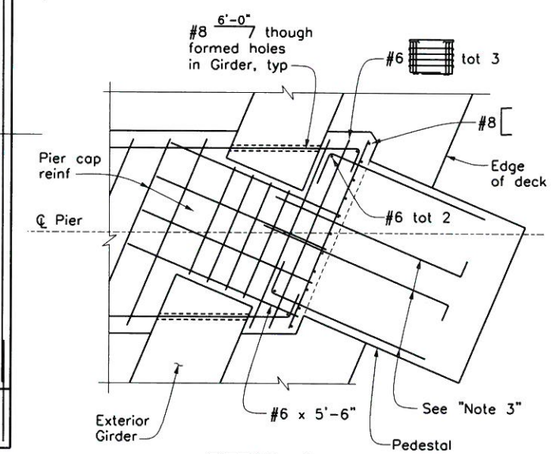

DETAIL 1

1/2" = 1'-0"

(Not all reinf shown)

Notes:

1. For Section "A-A" & "B-B", see "Pier Details No. 1" sheet.
2. For Section "C-C", see "Pier Details No. 2" sheet.
3. For pedestal reinforcement & details, see "Pedestal Details No. 1" sheet.

REGISTERED PROFESSIONAL ENGINEER TODD W. DUDLEY No. 39514 EXP. DATE 12/31/15 CIVIL STATE OF CALIFORNIA

AS-BUILT 08/10/14

BENCHMARK

S.P.S.N. 00586
6"x 6" CONC POST WITH DRIVE PIN LOCATED 1 MILE S.E. ALONG S.F.RR FROM RR CROSSING AT BOULDER AVE., AT SOUTH END OF ST. HWY R/W FENCE, 23.5 FT. NORTH OF NORTH RAIL OF RR, 41 FT. EAST OF BOULDER AVE., NORTHBOUND TRAFFIC LANE, 12 FT. NORTH OF CULVERT HEADWALL.
ELEV. = 1353.459'

REGISTERED PROFESSIONAL ENGINEER MOHAN S. CHAR No. 57894 Exp. 6/30/14 CIVIL STATE OF CALIFORNIA

SUBMITTED BY: DATE: 6-16-11

PLANS PREPARED BY:

AECOM
901 VIA PIEMONTE, 5TH FLOOR
ONTARIO, CALIFORNIA 91764

REVISIONS			
1	AS-BUILT REVISIONS	TD	6/10/14
MARK	DESCRIPTION	APPR.	DATE

CITY OF HIGHLAND

DESIGNED BY KG | DRAWN BY RA | CHECKED BY MC
SUBMITTED BY TODD DUDLEY
RECOMMENDED BY MOHAN CHAR 10/4/11
MOHAN S. CHAR R.C.E. 57894 EXP. 6-30-14 DATE
APPROVED BY 10.6.11
ERNEST WONG, CITY ENGINEER DATE
R.C.E. 37413 EXP. 6-30-14

BOULDER AVENUE BRIDGE OVER CITY CREEK (REPLACEMENT)

PIER LAYOUT

DRAWER NO.

SHEET 16 OF 36

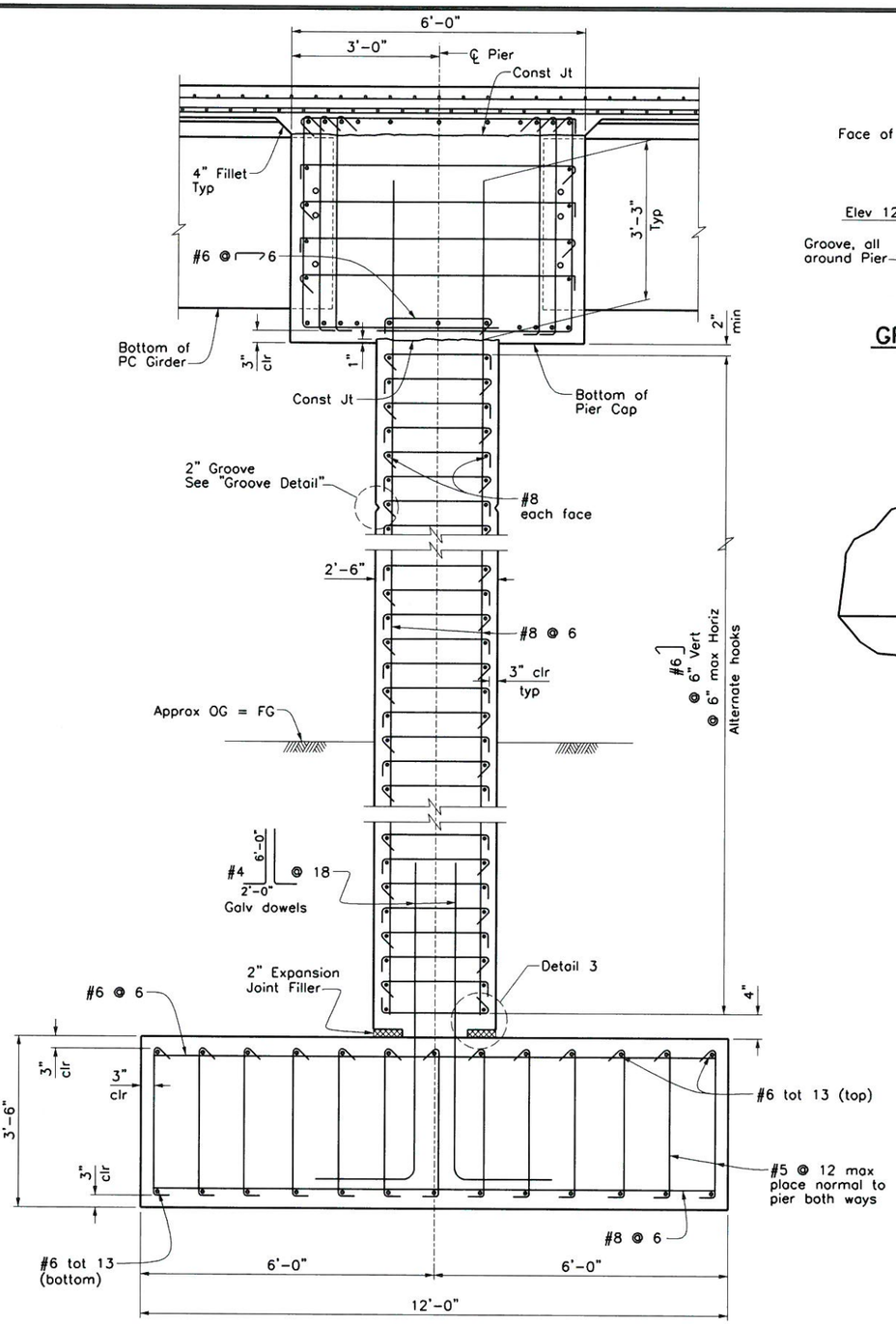

TYPICAL PIER SECTION
¾" = 1'-0"

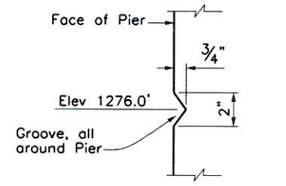

GROOVE DETAIL
No Scale

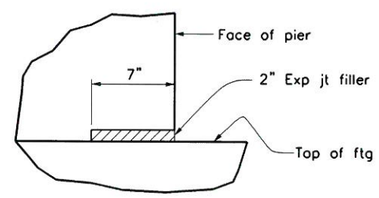

DETAIL 3
No Scale

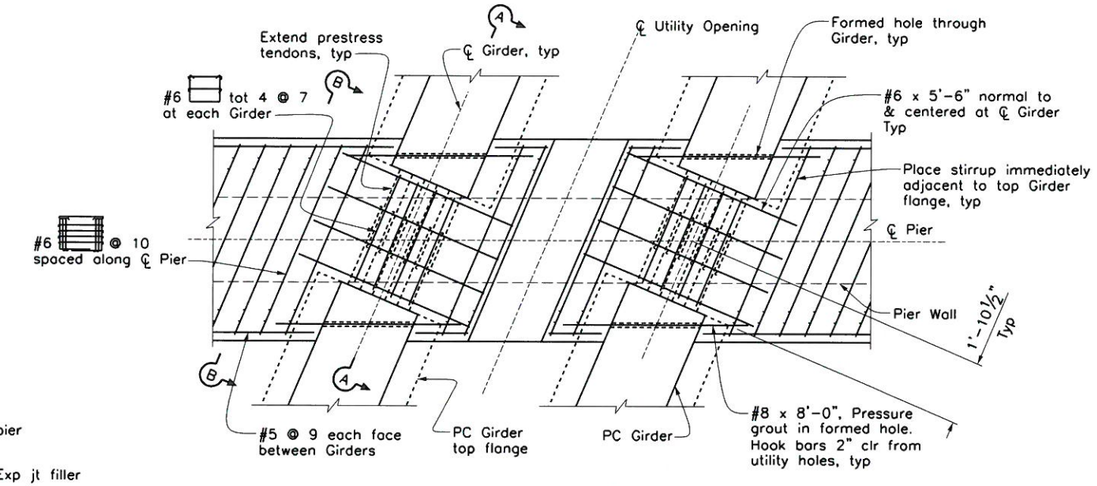

PART PLAN
½" = 1'-0"

Note:
For reinf at Utility Opening see B7-10 U-7

REGISTERED PROFESSIONAL ENGINEER TODD W. DUDLEY No. 39514 EXP. DATE 12/31/13 CIVIL STATE OF CALIFORNIA

AS-BUILT
08/10/14
NO AS-BUILT CHANGES

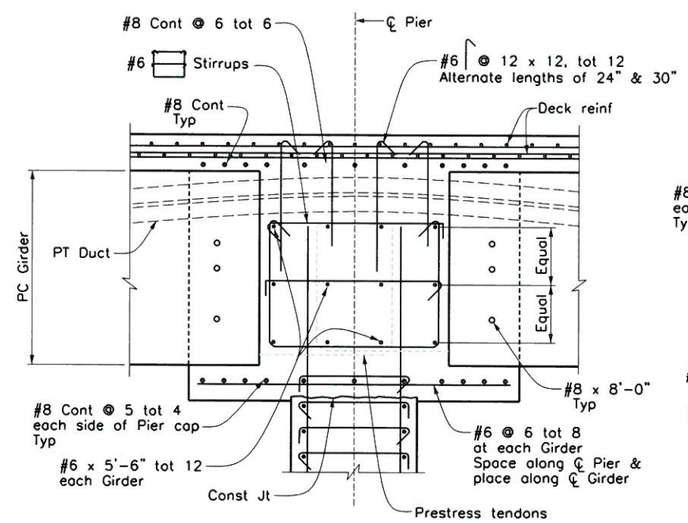

SECTION A-A
¾" = 1'-0"

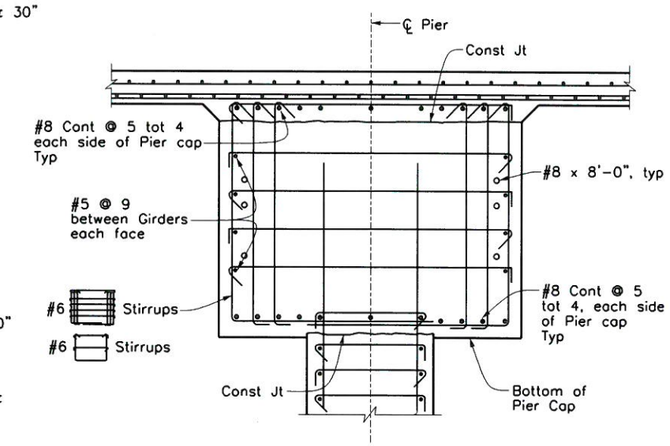

SECTION B-B
¾" = 1'-0"

BENCHMARK
S.P.S.N. 00586
6'x 6' CONC POST WITH DRIVE PIN LOCATED
1 MILE S.E. ALONG S.F.RR FROM RR CROSSING
AT BOULDER AVE., AT SOUTH END OF ST. HWY
R/W FENCE, 23.5 FT. NORTH OF NORTH RAIL OF RR,
41 FT. EAST OF BOULDER AVE., NORTHBOUND
TRAFFIC LANE, 12 FT. NORTH OF CULVERT HEADWALL.
ELEV. = 1353.459'

REGISTERED PROFESSIONAL ENGINEER MOHAN S. CHAR No. 57894 Exp. 6/30/14 CIVIL STATE OF CALIFORNIA

SUBMITTED BY: DATE: 6-16-11

PLANS PREPARED BY:
AECOM
901 VIA PIEMONTE, 5TH FLOOR
ONTARIO, CALIFORNIA 91764

REVISIONS

MARK	DESCRIPTION	APPR.	DATE
1	AS BUILT PLANS	TD	6/10/14

CITY OF HIGHLAND

DESIGNED BY	DRAWN BY	CHECKED BY
KG	RA	MC

SUBMITTED BY: TODD DUDLEY
RECOMMENDED BY: MOHAN CHAR 10/4/11
MOHAN S. CHAR DATE
R.C.E. 57894 EXP. 6-30-14

APPROVED BY: Ernest Wong 10.6.11
ERNEST WONG, CITY ENGINEER DATE
R.C.E. 37413 EXP. 6-30-14

BOULDER AVENUE BRIDGE OVER CITY CREEK (REPLACEMENT)

PIER DETAILS No. 1

DRAWER NO.

SHEET 17 OF 36

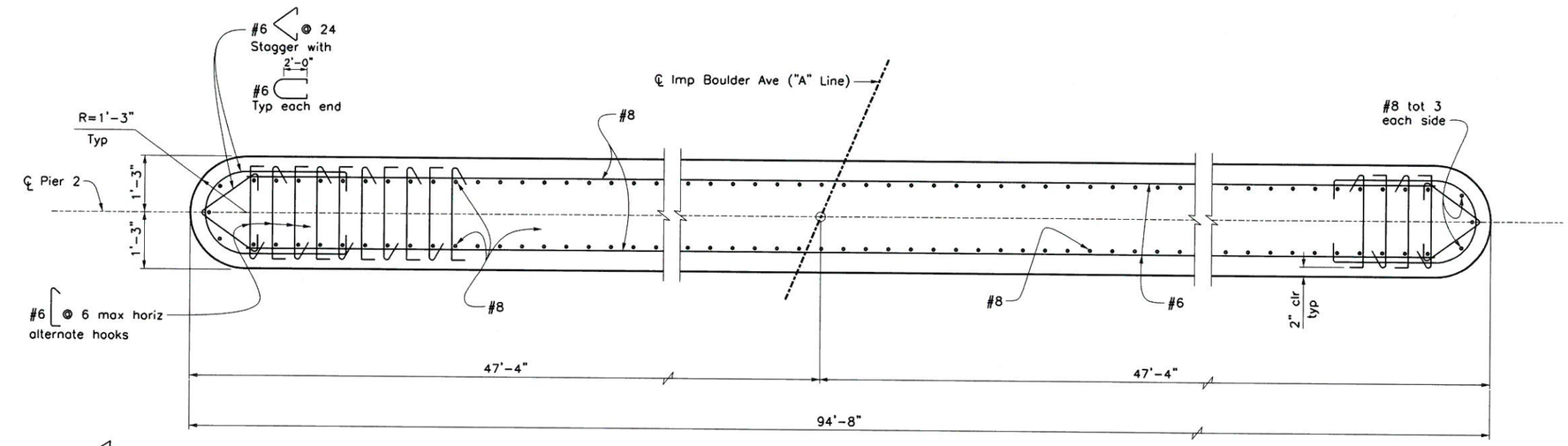

SECTION C-C

¾" = 1'-0"

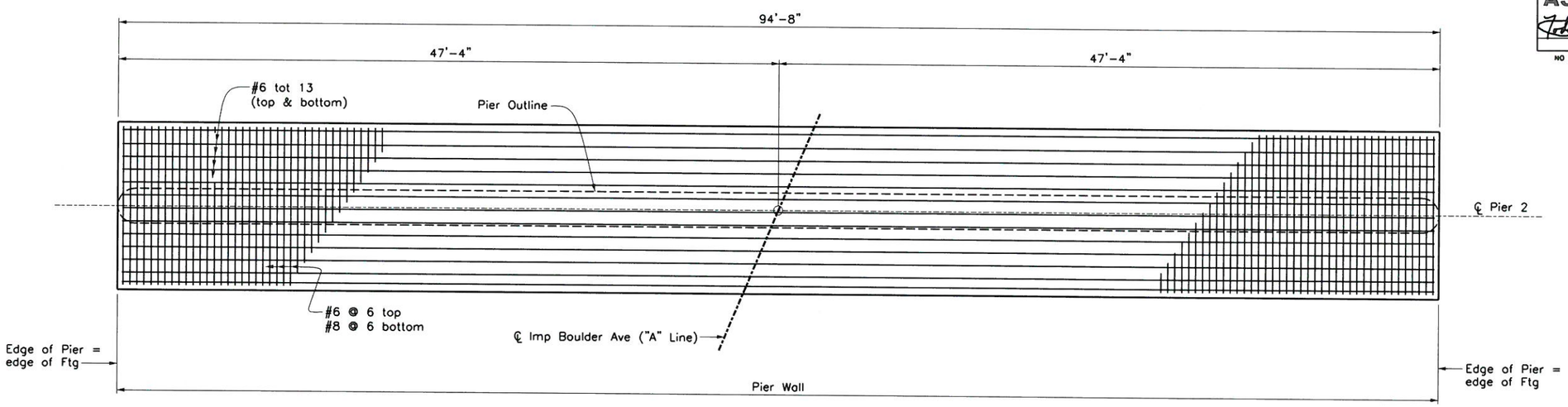

PIER FOOTING PLAN

1/4" = 1'-0"

(Pier 2 shown, Piers 3 & 4 similar)

REGISTERED PROFESSIONAL ENGINEER TODD W. DUDLEY No. 39514 EXP. DATE 12/31/13 CIVIL STATE OF CALIFORNIA

AS-BUILT
Todd W. Dudley 08/10/14
NO AS-BUILT CHANGES

BENCHMARK

S.P.S.N. 00586
6'x 6' CONC POST WITH DRIVE PIN LOCATED 1 MILE S.E. ALONG S.F.RR FROM RR CROSSING AT BOULDER AVE., AT SOUTH END OF ST. HWY R/W FENCE, 23.5 FT. NORTH OF NORTH RAIL OF RR, 41 FT. EAST OF BOULDER AVE., NORTHBOUND TRAFFIC LANE, 12 FT. NORTH OF CULVERT HEADWALL.
ELEV. = 1353.459'

REGISTERED PROFESSIONAL ENGINEER MOHAN S. CHAR No. 57894 Exp. 6/30/14 CIVIL STATE OF CALIFORNIA

SUBMITTED BY: MSchar DATE: 6-16-11

PLANS PREPARED BY:
AECOM
901 VIA PIEMONTE, 5TH FLOOR
ONTARIO, CALIFORNIA 91764

REVISIONS

MARK	DESCRIPTION	APPR.	DATE
1	AS BUILT PLANS	TD	6/10/14

CITY OF HIGHLAND

DESIGNED BY KG | DRAWN BY RA | CHECKED BY MC
SUBMITTED BY TODD DUDLEY
RECOMMENDED BY MOHAN CHAR 10/4/11
MOHAN S. CHAR R.C.E. 57894 EXP. 6-30-14 DATE
APPROVED BY Ernest Wong 10.6.11
ERNEST WONG, CITY ENGINEER R.C.E. 37413 EXP. 6-30-14 DATE

BOULDER AVENUE BRIDGE OVER CITY CREEK (REPLACEMENT)

PIER DETAILS No. 2

DRAWER NO.

SHEET 18 OF 36

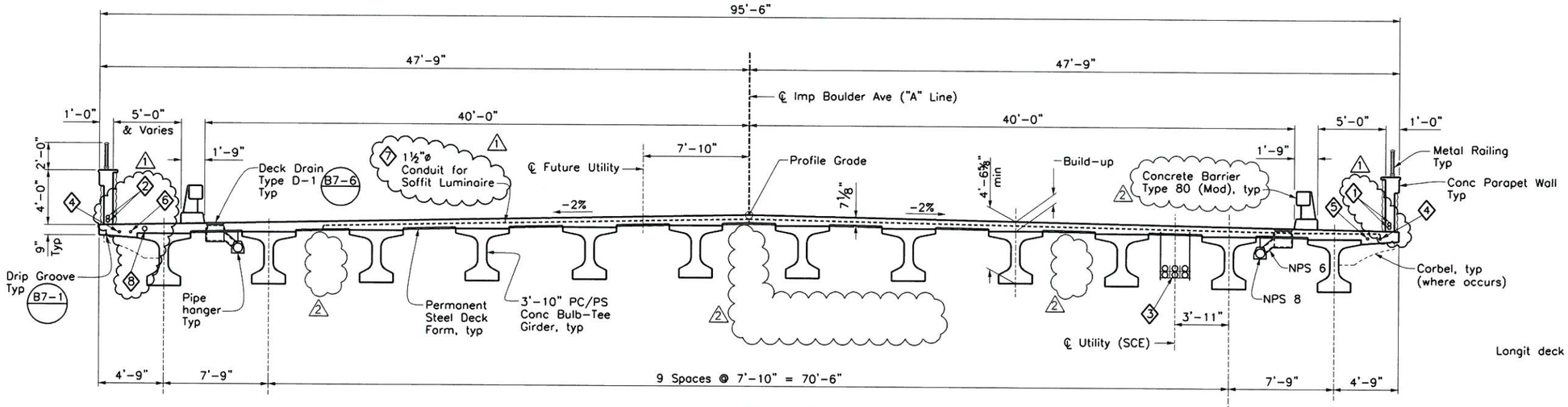

TYPICAL SECTION

¼" = 1'-0"

Note: For Utility Schedule, see "Utility Details" sheet.

UTILITY LEGEND

1
1. 2- 3"ø Future Utility Conduits (PVC Schedule 80)
2. 1- 3"ø Utility Conduit (Time Warner) (PVC Schedule 80)
   1- 3"ø Future Utility Conduit (PVC Schedule 80)
3. 6- 5"ø Future Electrical Conduits (PVC Schedule 80) (To be furnished & installed by SCE Contractor) See "Note 3"
4. 1- 2"ø Conduit (Street Lighting) (PVC Schedule 80)
5. 1- 2"ø Future Utility Conduit (PVC Schedule 80)
6. 1- 2"ø Conduit (Signal Interconnect) (PVC Schedule 80)
7. 1- 1½"ø Conduit (Soffit Luminaire) (PVC Schedule 80)
8. 1- 4"ø Conduit (Landscape Irrigation) (PVC Schedule 80) See "Note 4"

1 Notes:
1. Top of pull boxes embedded in pedestal/pilaster shall be flush with face of pedestal/pilaster.
2. For limits of conduits, see "Abutment Details No. 4" sheet "Conduit Installation Details".
3. Provide pull ropes in all conduits.
4. Location of 4"ø conduit as shown is approximate. The Contractor may adjust location of 4"ø conduit within the limits of first two girders from edge of deck to avoid conflicts.

SCE Notes:

1. Contractor shall inform SCE Inspector 4 weeks in advance of any construction activities affecting SCE existing or planned facilities.
2. Contractor shall install SCE furnished inserts & threaded rods to mark the locations of hanger assembly.
3. See "SCE Plans" for hanger assembly details. See "Utility Details" sheet for "Note" on insert layout.
4. Bend bottom transverse deck reinf bar at overhang as needed to accomodate 2" dia conduits.

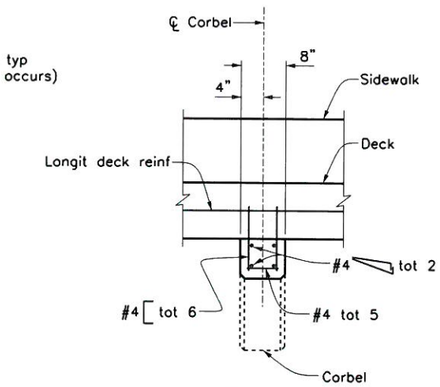

SECTION A-A

1" = 1'-0"

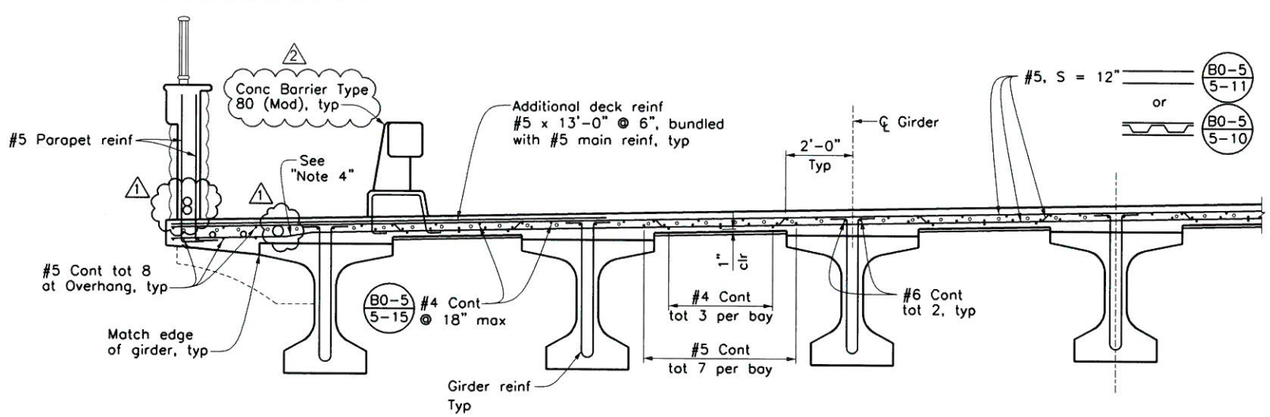

PART TYPICAL SECTION B0-5

½" = 1'-0"

LEGEND

∘ Indicates additional mild steel reinforcement, see "Deck Reinforcement" sheet.

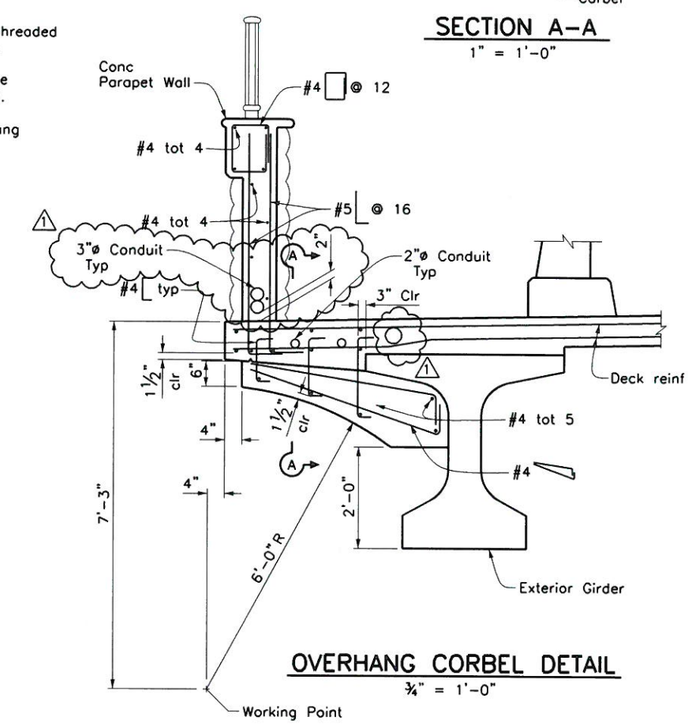

OVERHANG CORBEL DETAIL

¾" = 1'-0"

REGISTERED PROFESSIONAL ENGINEER TODD W. DUDLEY No. 39514 EXP. DATE 12/31/15 CIVIL STATE OF CALIFORNIA

AS-BUILT 08/10/14

BENCHMARK

S.P.S.N. 00586
6'x 6' CONC POST WITH DRIVE PIN LOCATED 1 MILE S.E. ALONG S.F.RR FROM RR CROSSING AT BOULDER AVE., AT SOUTH END OF ST. HWY R/W FENCE, 23.5 FT. NORTH OF NORTH RAIL OF RR, 41 FT. EAST OF BOULDER AVE., NORTHBOUND TRAFFIC LANE, 12 FT. NORTH OF CULVERT HEADWALL.
ELEV. = 1353.459'

REGISTERED PROFESSIONAL ENGINEER MOHAN S. CHAR No. 57894 Exp. 6/30/14 CIVIL STATE OF CALIFORNIA

SUBMITTED BY: MSchar DATE: 6-16-11

PLANS PREPARED BY:
AECOM
901 VIA PIEMONTE, 5TH FLOOR
ONTARIO, CALIFORNIA 91764

REVISIONS

MARK	DESCRIPTION	APPR.	DATE
1	Revised Legend, Notes & conduits	MC	9/14/12
2	AS-BUILT REVISIONS	TD	6/10/14

CITY OF HIGHLAND

DESIGNED BY KG | DRAWN BY RA | CHECKED BY MC
SUBMITTED BY TODD DUDLEY
RECOMMENDED BY MOHAN CHAR 10/4/11
MOHAN S. CHAR R.C.E. 57894 EXP. 6-30-14 DATE
APPROVED BY Ernest Wong 10/6/11
ERNEST WONG, CITY ENGINEER R.C.E. 37413 EXP. 6-30-14 DATE

BOULDER AVENUE BRIDGE OVER CITY CREEK (REPLACEMENT)

TYPICAL SECTION

DRAWER NO.

SHEET 19R1 OF 36

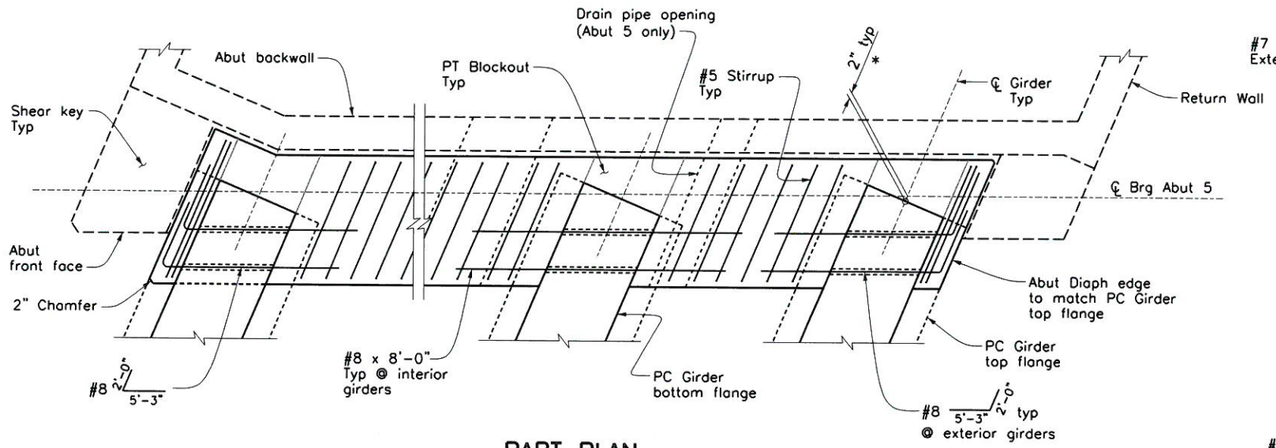

PART PLAN

½" = 1'-0"
(Abutment 5 shown)

*Measured along ℄ Girder

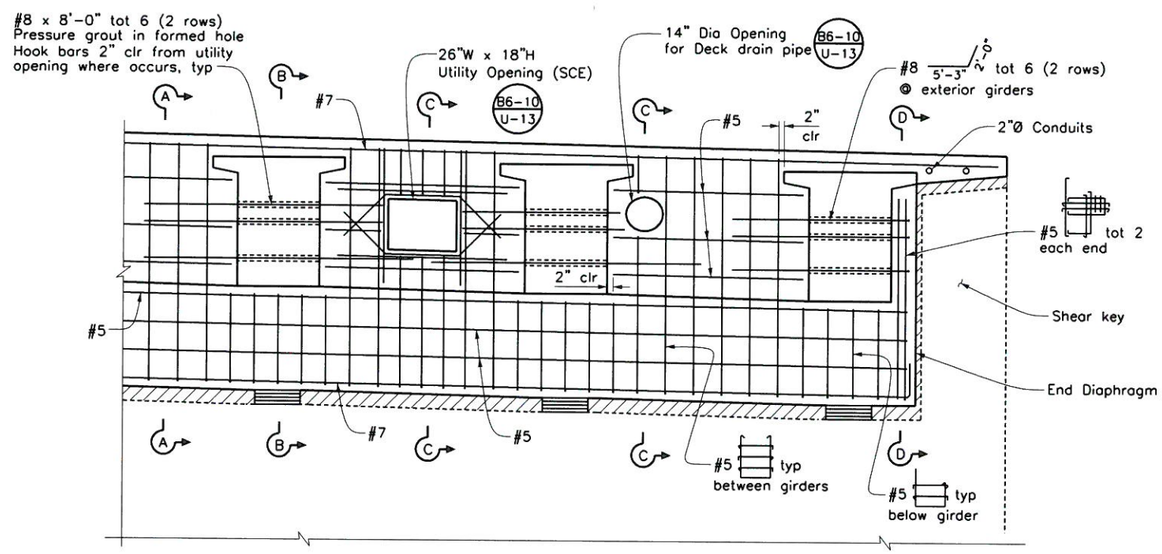

PART ELEVATION

½" = 1'-0"
(Abutment 5 shown)

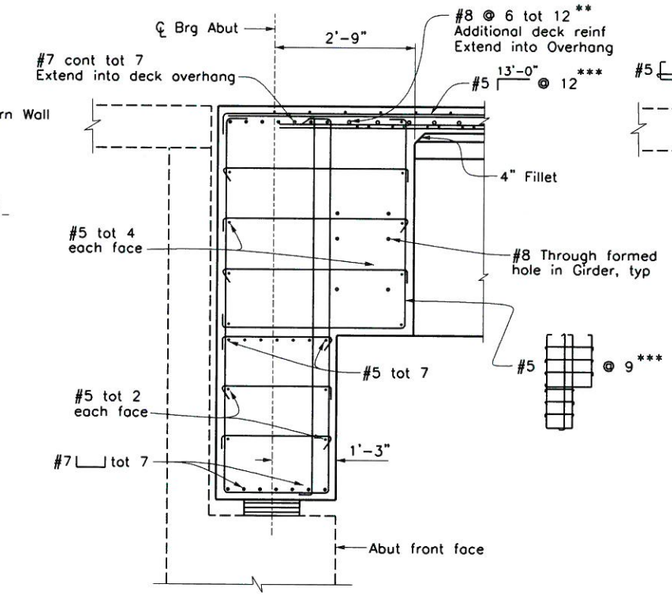

SECTION A-A

¾" = 1'-0"
(Between Girders)

** Place along & space normal to ℄ Brg Abut
*** Place along & space normal to "A" Line

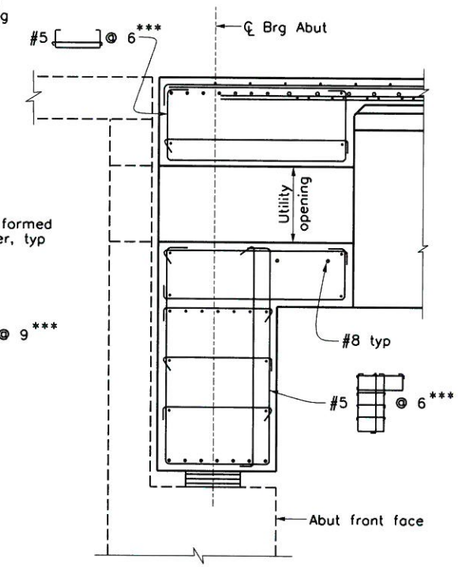

SECTION C-C

¾" = 1'-0"

For information not shown, see "Section A-A"

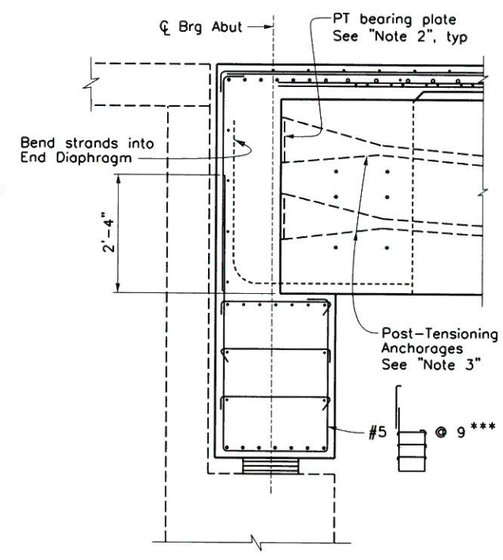

SECTION B-B

¾" = 1'-0"

For information not shown, see "Section A-A"

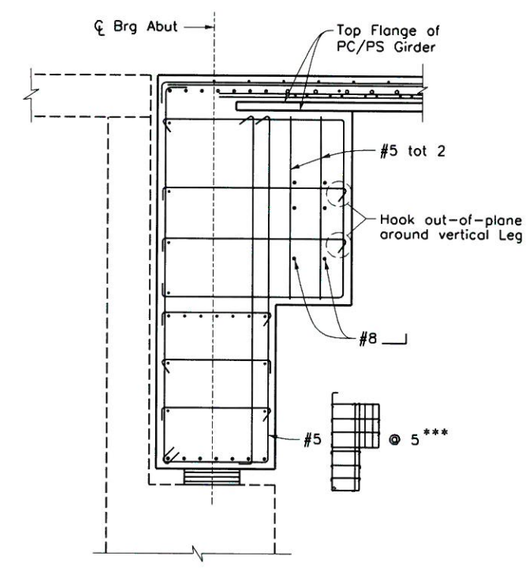

SECTION D-D

¾" = 1'-0"

For information not shown, see "Section A-A"

Notes:

1. Reinforcement may be bent as needed to perform Post-Tensioning operations.
2. Post-Tensioning plate size to be determined by Post-Tensioning Contractor.
3. Local anchorage zone reinforcement to be determined by Post-Tensioning Contractor.

REGISTERED PROFESSIONAL ENGINEER TODD W. DUDLEY No 39514 EXP. DATE 12/31/15 CIVIL STATE OF CALIFORNIA

AS-BUILT
Todd W. Dudley 05/10/14
NO AS-BUILT CHANGES

BENCHMARK

S.P.S.N. 00586
6'x 6' CONC POST WITH DRIVE PIN LOCATED
1 MILE S.E. ALONG S.F.RR FROM RR CROSSING
AT BOULDER AVE., AT SOUTH END OF ST. HWY
R/W FENCE, 23.5 FT. NORTH OF NORTH RAIL OF RR,
41 FT. EAST OF BOULDER AVE., NORTHBOUND
TRAFFIC LANE, 12 FT. NORTH OF CULVERT HEADWALL.
ELEV. = 1353.459'

REGISTERED PROFESSIONAL ENGINEER MOHAN S. CHAR No. 57894 Exp. 6/30/14 CIVIL STATE OF CALIFORNIA

SUBMITTED BY: MSchar
DATE: 6-16-11

PLANS PREPARED BY:
AECOM
901 VIA PIEMONTE, 5TH FLOOR
ONTARIO, CALIFORNIA 91764

REVISIONS			
MARK	DESCRIPTION	APPR.	DATE
1	AS BUILT PLANS	TD	6/10/14

CITY OF HIGHLAND

DESIGNED BY	DRAWN BY	CHECKED BY
KG	RA	MC

SUBMITTED BY: TODD DUDLEY
RECOMMENDED BY: MOHAN CHAR 10/4/11
MOHAN S. CHAR DATE
R.C.E. 57894 EXP. 6-30-14

APPROVED BY: Ernest Wong 10.6.11
ERNEST WONG, CITY ENGINEER DATE
R.C.E. 37413 EXP. 6-30-14

BOULDER AVENUE BRIDGE OVER CITY CREEK (REPLACEMENT)

ABUTMENT DIAPHRAGM DETAILS

DRAWER NO.

SHEET 20 OF 36

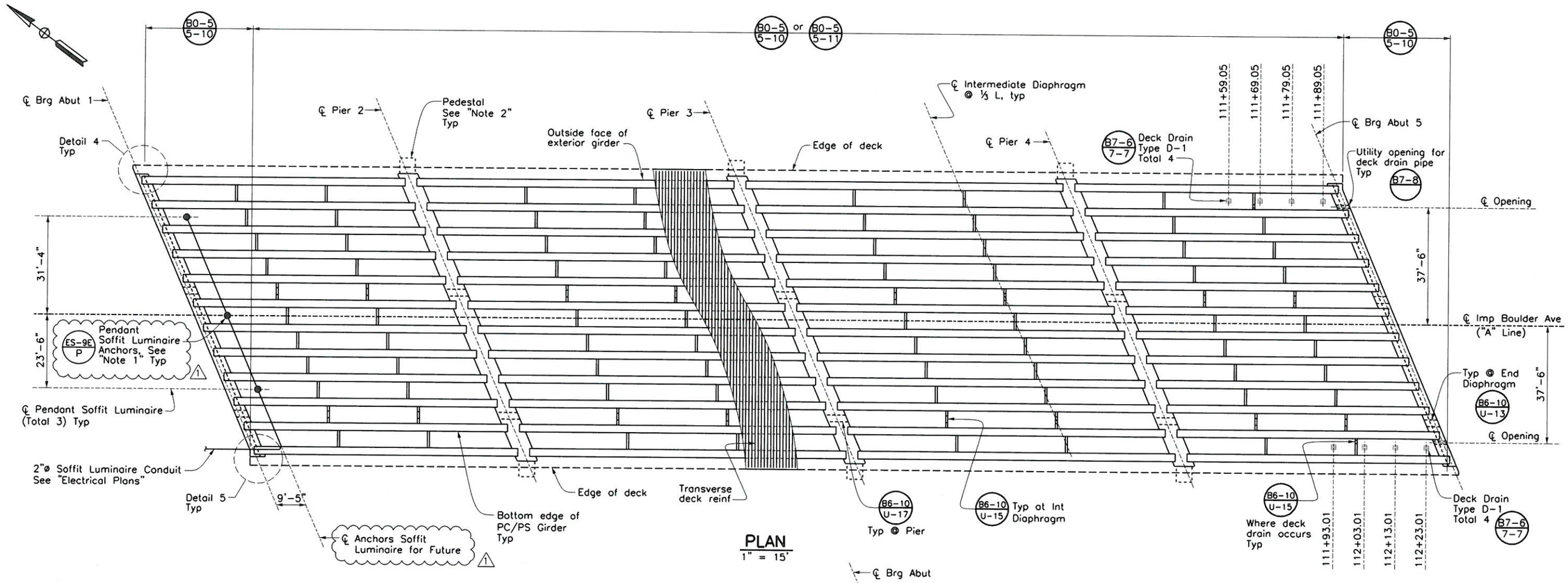

PLAN
1" = 15'

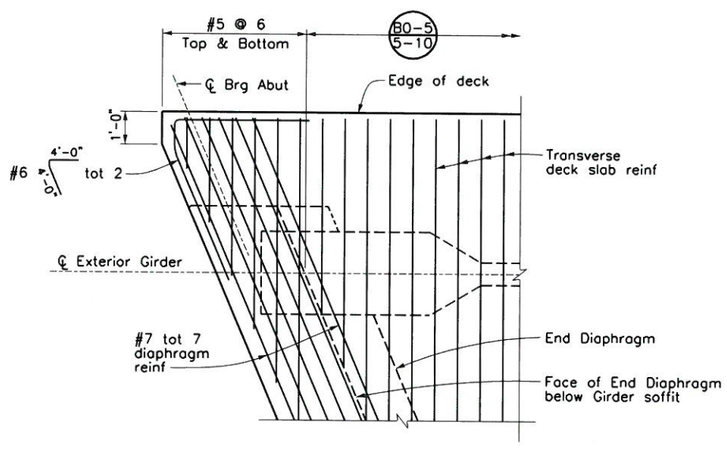

DETAIL 4
½" = 1'-0"

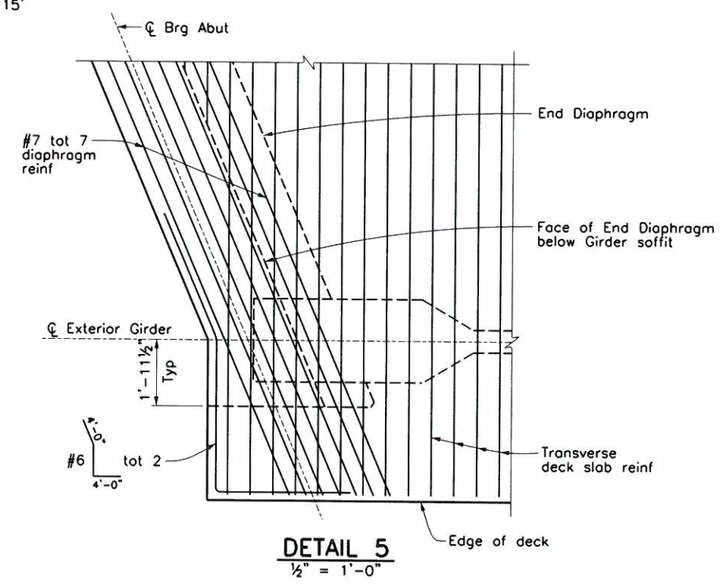

DETAIL 5
½" = 1'-0"

LEGEND

⊟ Deck Drain, Type D-1

REGISTERED PROFESSIONAL ENGINEER TODD W. DUDLEY No. 39514 EXP. DATE 12/31/13 CIVIL STATE OF CALIFORNIA

AS-BUILT 08/10/14

Note:

1. No. 8 pull box installation to be attached to stay-in-place deck forms with 3/8" anchors extending into deck concrete through forms. Conduits in deck concrete to bend 90° above pull box location and extend through stay-in-place deck forms to pull box.

Note:
The Contractor shall verify all controlling field dimensions before ordering or fabricating any material.

BENCHMARK

S.P.S.N. 00586
6'x 6' CONC POST WITH DRIVE PIN LOCATED 1 MILE S.E. ALONG S.F.RR FROM RR CROSSING AT BOULDER AVE., AT SOUTH END OF ST. HWY R/W FENCE, 23.5 FT. NORTH OF NORTH RAIL OF RR, 41 FT. EAST OF BOULDER AVE., NORTHBOUND TRAFFIC LANE, 12 FT. NORTH OF CULVERT HEADWALL.
ELEV. = 1353.459'

REGISTERED PROFESSIONAL ENGINEER MOHAN S. CHAR No. 57894 Exp. 6/30/14 CIVIL STATE OF CALIFORNIA

SUBMITTED BY: MSchar DATE: 6-16-11

PLANS PREPARED BY:
AECOM
901 VIA PIEMONTE, 5TH FLOOR
ONTARIO, CALIFORNIA 91764

REVISIONS			
MARK	DESCRIPTION	APPR	DATE
1	AS-BUILT REVISIONS	TD	6/10/14

CITY OF HIGHLAND

DESIGNED BY KG | DRAWN BY RA | CHECKED BY MC
SUBMITTED BY TODD DUDLEY
RECOMMENDED BY MOHAN CHAR 10/4/11
MOHAN S. CHAR DATE R.C.E. 57894 EXP. 6-30-14
APPROVED BY 10.6.11
ERNEST WONG, CITY ENGINEER DATE R.C.E. 37413 EXP. 6-30-14

BOULDER AVENUE BRIDGE OVER CITY CREEK (REPLACEMENT)

GIRDER LAYOUT

DRAWER NO.

SHEET 21 OF 36

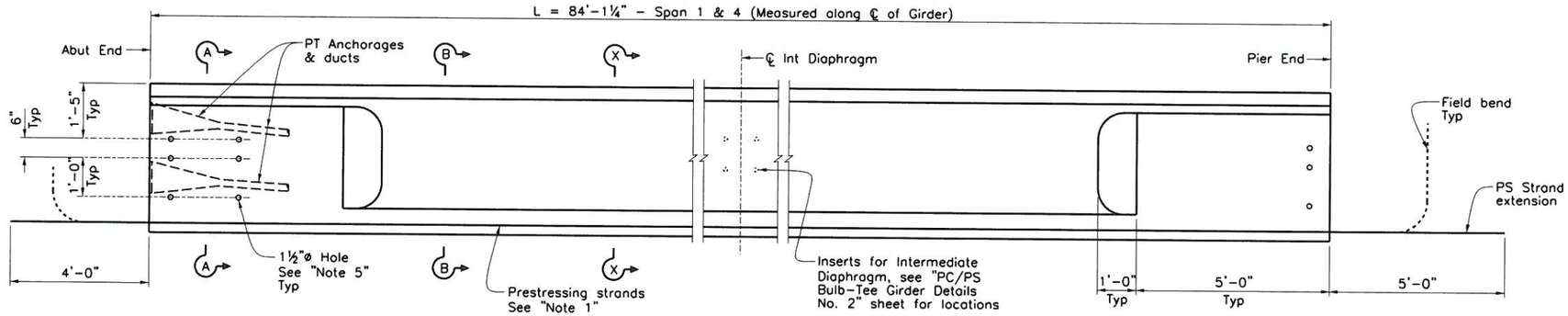

GIRDER ELEVATION - SPANS 1 & 4

No Scale

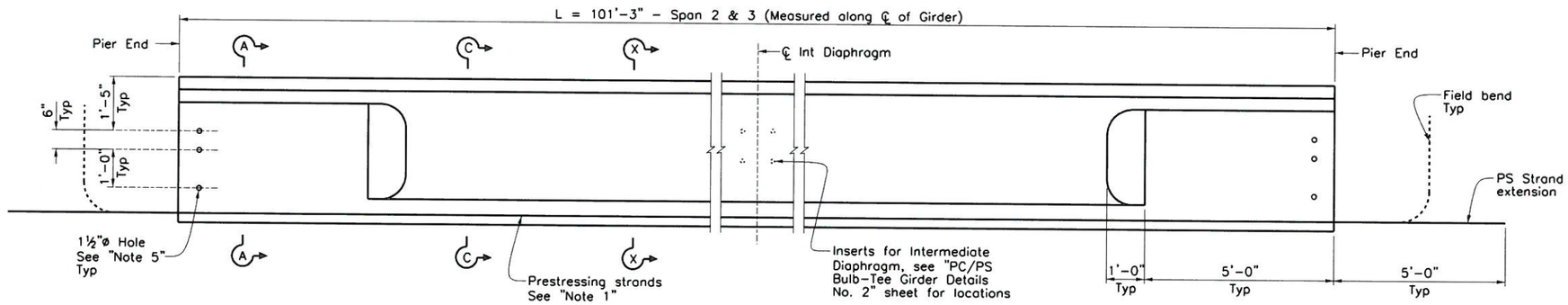

GIRDER ELEVATION - SPANS 2 & 3

No Scale

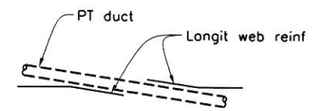

PT DUCT DETAIL

No Scale

Note:
If necessary, trim & bend girder web reinforcing as shown.

Notes:

1. For post-tension details, see "Post Tensioning Tendon Layout" sheet.
2. Adjust stirrups in transition region.
3. For stirrup spacing, see "PC/PS Bulb-Tee Girder Details No. 2" sheet.
4. The Precaster shall ensure that tendon openings are free from any debris or blocking objects.
5. For hole locations, see "PC/PS Bulb-Tee Girder Details No. 2" sheet. Vertical spacing can be adjusted to clear Post-Tensioning Ducts and Anchorages.

STRAND LEGEND

- Debond 10' from Girder ends
- Debond 15' from Girder ends
- Extend beyond North-facing Girder end
- Extend beyond South-facing Girder end
- Mild reinforcement, not all shown
- No debonding, trim flush with Girder end

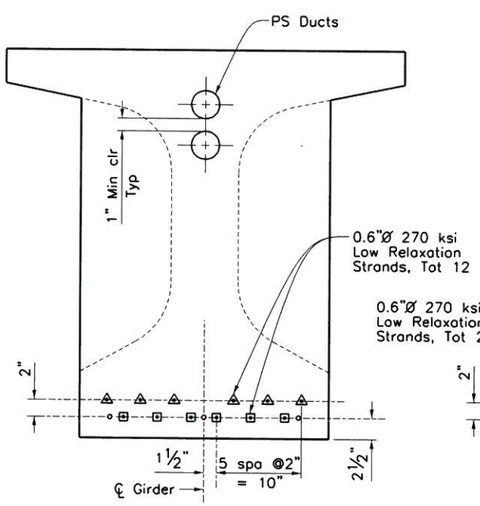

SECTION B-B

1" = 1'-0"

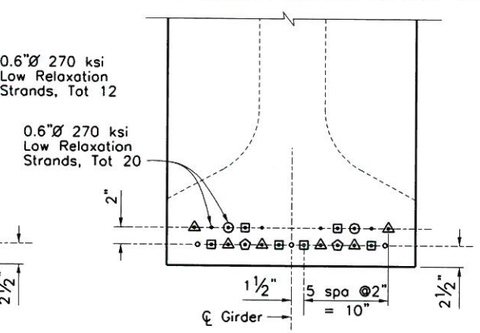

SECTION C-C

1" = 1'-0"

Strand Pattern symmetrical about centerline of Girder
For information not shown, see "Section X-X" & "Section A-A".

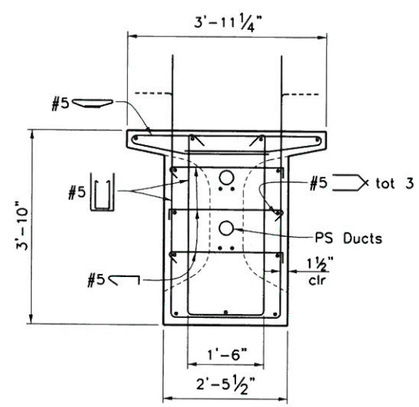

SECTION A-A

¾" = 1'-0"

For information not shown, see "Section X-X"

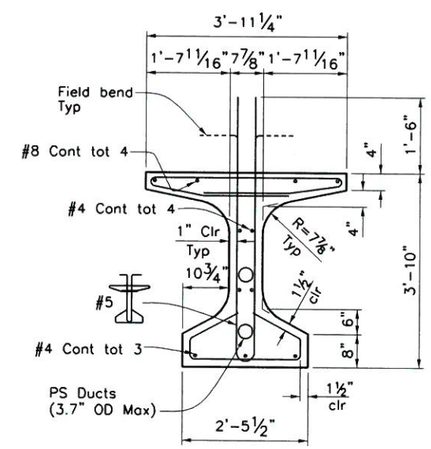

SECTION X-X

¾" = 1'-0"

REGISTERED PROFESSIONAL ENGINEER TODD W. DUDLEY No. 39514 EXP. DATE 12/31/15 CIVIL STATE OF CALIFORNIA

AS-BUILT
06/10/14
NO AS-BUILT CHANGES

BENCHMARK

S.P.S.N. 00586
6'x 6' CONC POST WITH DRIVE PIN LOCATED 1 MILE S.E. ALONG S.F.RR FROM RR CROSSING AT BOULDER AVE., AT SOUTH END OF ST. HWY R/W FENCE, 23.5 FT. NORTH OF NORTH RAIL OF RR, 41 FT. EAST OF BOULDER AVE., NORTHBOUND TRAFFIC LANE, 12 FT. NORTH OF CULVERT HEADWALL.
ELEV. = 1353.459'

REGISTERED PROFESSIONAL ENGINEER MOHAN S. CHAR No. 57894 Exp. 6/30/14 CIVIL STATE OF CALIFORNIA

SUBMITTED BY: MSchar
DATE: 6-16-11

PLANS PREPARED BY:
AECOM
901 VIA PIEMONTE, 5TH FLOOR
ONTARIO, CALIFORNIA 91764

REVISIONS

MARK	DESCRIPTION	APPR	DATE
1	AS BUILT PLANS	TD	6/10/14

CITY OF HIGHLAND

DESIGNED BY KG | DRAWN BY RA | CHECKED BY MC
SUBMITTED BY TODD DUDLEY
RECOMMENDED BY MOHAN CHAR 10/4/11
MOHAN S. CHAR R.C.E. 57894 EXP. 6-30-14 DATE
APPROVED BY
ERNEST WONG, CITY ENGINEER R.C.E. 37413 EXP. 6-30-14 DATE 10 6 11

BOULDER AVENUE BRIDGE OVER CITY CREEK (REPLACEMENT)

PC/PS BULB-TEE GIRDER DETAILS No. 1

DRAWER NO.

SHEET 22 OF 36

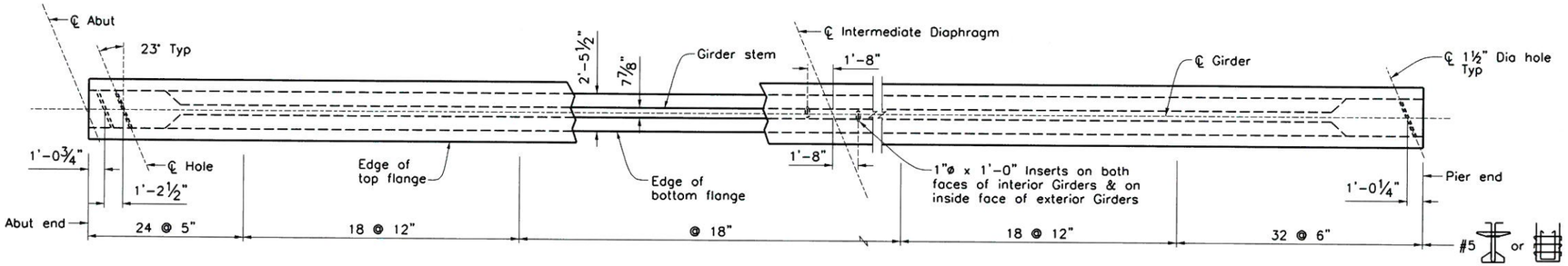

GIRDER PART PLAN – SPAN 1 & 4

¼" = 1'-0"

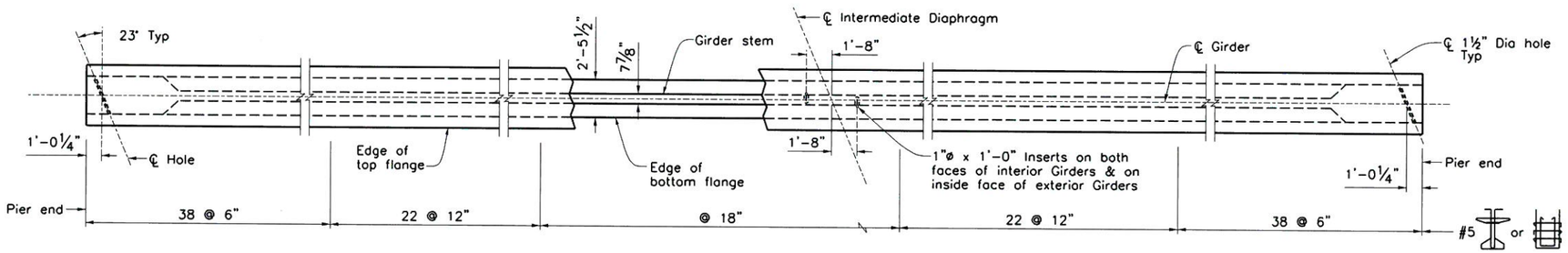

GIRDER PART PLAN – SPAN 2 & 3

¼" = 1'-0"

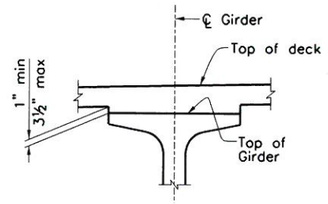

BUILD-UP DETAIL

No Scale
(See "Note 4")

NOTES:

1. Cost of reinforcing bars and structural steel embedded in Bridge girders shall be included in unit price bid for prestressed concrete bridge member.
2. Fabricator is responsible for developing lifting device to provide safety factor of four on working load. Detail shall be proof-tested with test results kept on file by Fabricator and available for inspection by the Engineer.
3. The top surfaces of girders shall be thoroughly wire brushed and scored transversely after initial set (min. depth = ¼" across entire flange width).
4. Build up values to be determinded by the Contractor. See "Deck Reinforcement" sheet for component deflections.

Girder Data (Pretensioning)			Concrete Strength	
Girder	L	P= Jacking Force	f'ci	f'c
Span 1 & 4	84'-1¼"	528 kips	5.5 ksi	6.0 ksi
Span 2 & 3	101'-3"	880 kips	5.5 ksi	6.0 ksi

Within each Span, all girders are identical unless otherwise noted.
Jacking force – pretensioning only

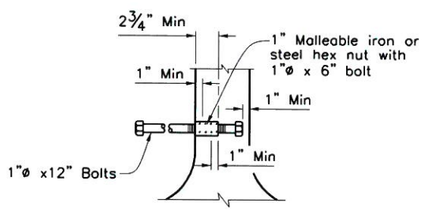

INSERT ASSEMBLY

No Scale

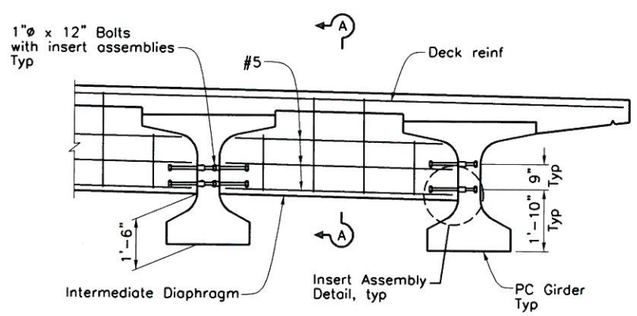

INTERMEDIATE DIAPHRAGM

½" = 1'-0"

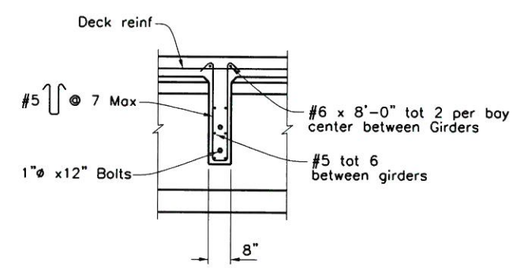

SECTION A–A

½" = 1'-0"

REGISTERED PROFESSIONAL ENGINEER TODD W. DUDLEY No 39514 EXP. DATE 12/31/15 CIVIL STATE OF CALIFORNIA

AS-BUILT
Todd W. Dudley 08/10/14
NO AS-BUILT CHANGES

BENCHMARK
S.P.S.N. 00586
6'x 6' CONC POST WITH DRIVE PIN LOCATED 1 MILE S.E. ALONG S.F.RR FROM RR CROSSING AT BOULDER AVE., AT SOUTH END OF ST. HWY R/W FENCE, 23.5 FT. NORTH OF NORTH RAIL OF RR, 41 FT. EAST OF BOULDER AVE., NORTHBOUND TRAFFIC LANE, 12 FT. NORTH OF CULVERT HEADWALL.
ELEV. = 1353.459'

REGISTERED PROFESSIONAL ENGINEER MOHAN S. CHAR No. 57894 Exp. 6/30/14 CIVIL STATE OF CALIFORNIA

SUBMITTED BY: MSchar DATE: 6-16-11

PLANS PREPARED BY:
AECOM
901 VIA PIEMONTE, 5TH FLOOR
ONTARIO, CALIFORNIA 91764

REVISIONS

MARK	DESCRIPTION	APPR.	DATE
1	AS BUILT PLANS	TD	6/10/14

CITY OF HIGHLAND

DESIGNED BY	DRAWN BY	CHECKED BY
KG	RA	MC

SUBMITTED BY: TODD DUDLEY
RECOMMENDED BY: MOHAN CHAR 10/4/11
MOHAN S. CHAR R.C.E. 57894 EXP. 6-30-14 DATE

APPROVED BY: Ernest Wong 10.6.11
ERNEST WONG, CITY ENGINEER R.C.E. 37413 EXP. 6-30-14 DATE

BOULDER AVENUE BRIDGE OVER CITY CREEK (REPLACEMENT)

PC/PS BULB-TEE GIRDER DETAILS No. 2

DRAWER NO.

SHEET 23 OF 36

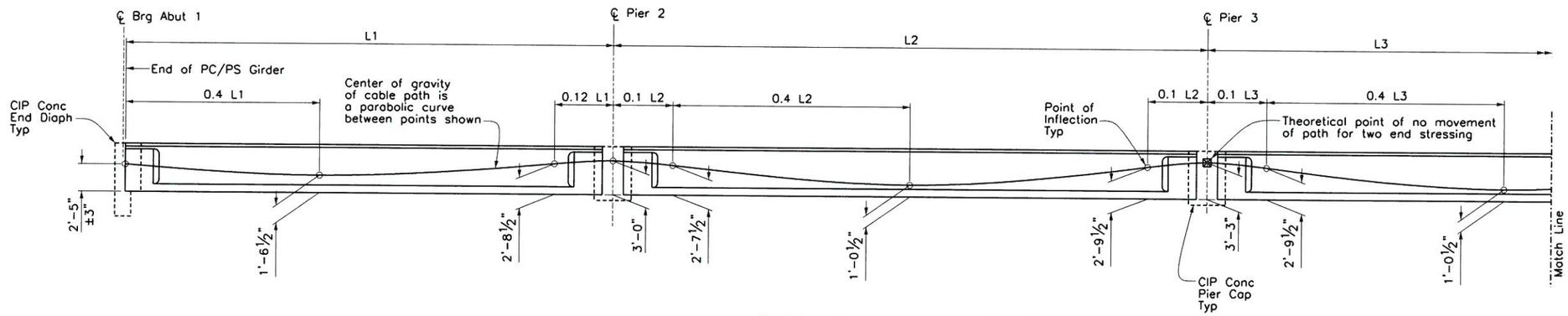

PART LONGITUDINAL SECTION

No Scale

Note: For "Camber Diagram", see "Deck Reinforcement" sheet.

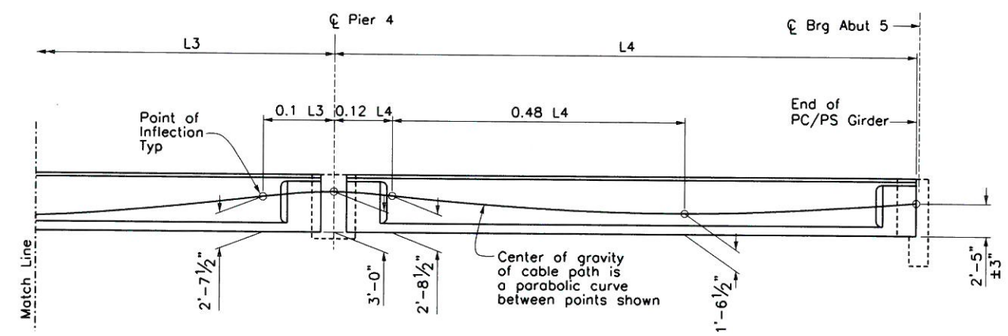

PART LONGITUDINAL SECTION

No Scale

Note: For "Camber Diagram", see "Deck Reinforcement" sheet.

PRESTRESSING NOTES:

270 ksi Low Relaxation Strand:

P_{jack} = 1,055 kips per Girder

Anchor Set = 3/8"

Friction Wobble Coeff k = 0.0002/ft

Friction Curvature Coeff μ = 0.15

Concrete deck & splices: f'c = 5 ksi @ 28 days
f'ci = 4 ksi @ time of stressing

PC/PS Girder: f'c = 6 ksi @ 28 days
See "PC/PS Bulb-Tee Girder Details No. 2" sheet.

The Contractor shall submit elongation calculations based on the initial stress at ⊠ = 0.909 times jacking stress

Stressing shall be performed from both ends. Anchorage zone reinforcement shall be adjusted or supplemented as required, to control splitting stresses for the prestressing system proposed for installation. Bar reinforcing interfering with prestressing tendon alignment shall be adjusted as required to avoid conflicts, and as approved by the Engineer.

Distribution of prestressing force:

Unless otherwise noted, the prestressing force shall be distributed with an approximately equal amount in each girder and shall be placed symmetrically about the center line of the structure.

Stressing sequence:

No more than 1/2 of the prestressing force in any girder may be applied before an equal force is applied in the adjacent girders. The maximum force variation between girders shall also not exceed the prestressing force of the largest tendon used in all girders. At no time during stressing operations will more than 1/6 of total prestressing force be applied eccentrically about the centerline of the structure.

REGISTERED PROFESSIONAL ENGINEER TODD W. DUDLEY No. 39514 EXP. DATE 12/31/15 CIVIL STATE OF CALIFORNIA

AS-BUILT
05/10/14
NO AS-BUILT CHANGES

BENCHMARK
S.P.S.N. 00586
6"x 6" CONC POST WITH DRIVE PIN LOCATED 1 MILE S.E. ALONG S.F.RR FROM RR CROSSING AT BOULDER AVE., AT SOUTH END OF ST. HWY R/W FENCE, 23.5 FT. NORTH OF NORTH RAIL OF RR, 41 FT. EAST OF BOULDER AVE., NORTHBOUND TRAFFIC LANE, 12 FT. NORTH OF CULVERT HEADWALL.
ELEV. = 1353.459'

REGISTERED PROFESSIONAL ENGINEER MOHAN S. CHAR No. 57894 Exp. 6/30/14 CIVIL STATE OF CALIFORNIA

SUBMITTED BY: MSchar DATE: 6-16-11

PLANS PREPARED BY:
AECOM
901 VIA PIEMONTE, 5TH FLOOR
ONTARIO, CALIFORNIA 91764

REVISIONS			
MARK	DESCRIPTION	APPR.	DATE
1	AS BUILT PLANS	TD	6/10/14

CITY OF HIGHLAND

DESIGNED BY KG | DRAWN BY RA | CHECKED BY MC
SUBMITTED BY TODD DUDLEY
RECOMMENDED BY MOHAN CHAR 10/4/11
MOHAN S. CHAR R.C.E. 57894 EXP. 6-30-14 DATE
APPROVED BY 10.6.11
ERNEST WONG, CITY ENGINEER R.C.E. 37413 EXP. 6-30-14 DATE

BOULDER AVENUE BRIDGE OVER CITY CREEK (REPLACEMENT)

POST TENSIONING TENDON LAYOUT

DRAWER NO.

SHEET 24 OF 36

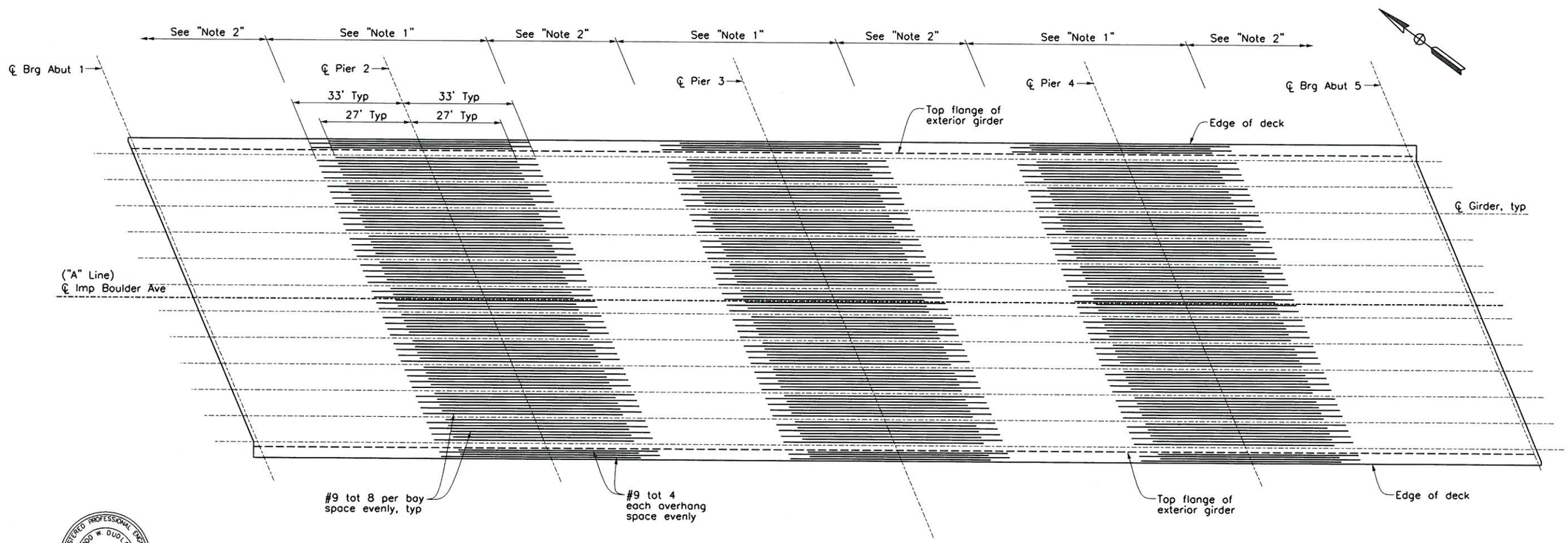

ADDITIONAL DECK REINFORCEMENT

1" = 15'

REGISTERED PROFESSIONAL ENGINEER TODD W. DUDLEY No 39514 EXP. DATE 12/31/12 CIVIL STATE OF CALIFORNIA

AS-BUILT

08/10/14

NO AS-BUILT CHANGES

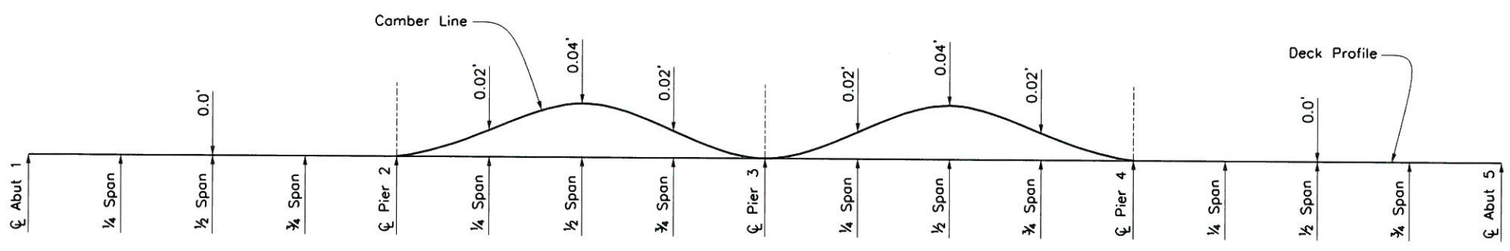

CAMBER DIAGRAM

No Scale

Notes:

1. No lap splices of typical longitudinal or additional reinforcement allowed within these limits.
2. Outside of the limits shown over each Pier Cap, all splices of longitudinal bars shall be "Service Level" or 2x the standard lap length.
3. Camber Diagram includes the following:
   - Dead Load of Deck
   - Dead Load of Haunch, Interior Diaphragms, Barriers, and Stay-In-Place Deck Forms.
   - Long term prestresing deflections of PC/PS Girder occuring after deck pour operation.
   - Post-Tensioning deflections including creep and shrinkage.
4. Camber is based on assumptions shown in the construction sequence shown on "Construction Sequence" sheet.
5. Camber of PC/PS Girders that is observed before deck pour operations begin is not considered in the camber diagram.
6. The Contractor shall determine temporary girder end support elevations based on the observed PC/PS Girder cambers, build-up thickness limitations, camber diagram, and deck contours.

BENCHMARK

S.P.S.N. 00586
6'x 6' CONC POST WITH DRIVE PIN LOCATED 1 MILE S.E. ALONG S.F.RR FROM RR CROSSING AT BOULDER AVE., AT SOUTH END OF ST. HWY R/W FENCE, 23.5 FT. NORTH OF NORTH RAIL OF RR, 41 FT. EAST OF BOULDER AVE., NORTHBOUND TRAFFIC LANE, 12 FT. NORTH OF CULVERT HEADWALL.
ELEV. = 1353.459'

REGISTERED PROFESSIONAL ENGINEER MOHAN S. CHAR No. 57894 Exp. 6/30/14 CIVIL STATE OF CALIFORNIA

SUBMITTED BY: MSchar DATE: 6-16-11

PLANS PREPARED BY:

AECOM
901 VIA PIEMONTE, 5TH FLOOR
ONTARIO, CALIFORNIA 91764

REVISIONS

MARK	DESCRIPTION	APPR.	DATE
1	AS BUILT PLANS	TD	6/10/14

CITY OF HIGHLAND

DESIGNED BY KG | DRAWN BY RA | CHECKED BY MC
SUBMITTED BY TODD DUDLEY
RECOMMENDED BY MOHAN CHAR 10/4/11
MOHAN S. CHAR R.C.E. 57894 EXP. 6-30-14 DATE
APPROVED BY Ernie Wong 10.6.11
ERNEST WONG, CITY ENGINEER R.C.E. 37413 EXP. 6-30-14 DATE

BOULDER AVENUE BRIDGE OVER CITY CREEK (REPLACEMENT)

DECK REINFORCEMENT

DRAWER NO.

SHEET 25 OF 36

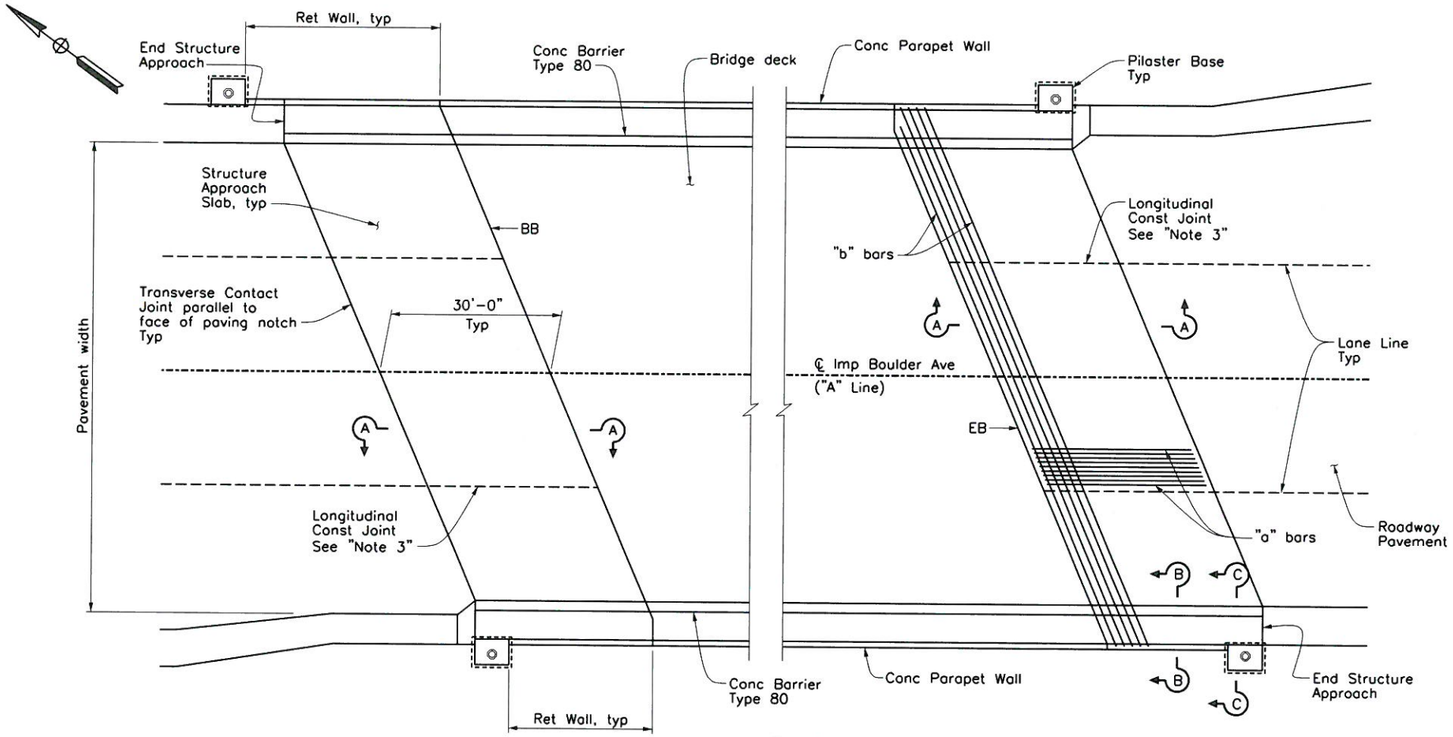

PLAN
No Scale

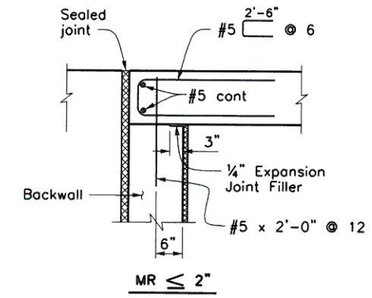

ABUTMENT TIE DETAIL
No Scale
See "Note 1"

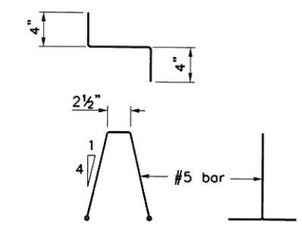

BAR CHAIR DETAIL
No Scale

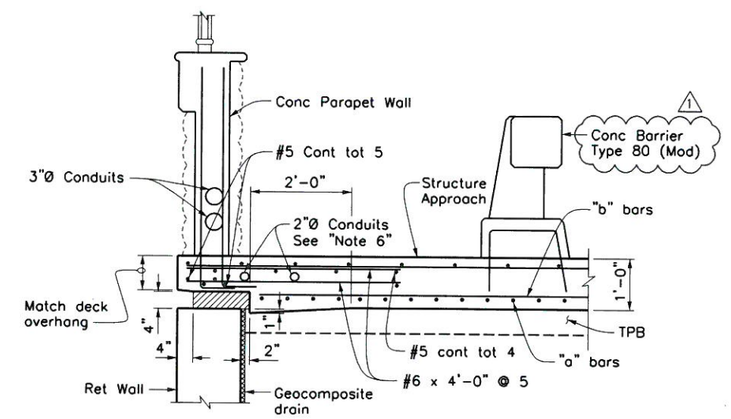

SECTION B-B
No Scale

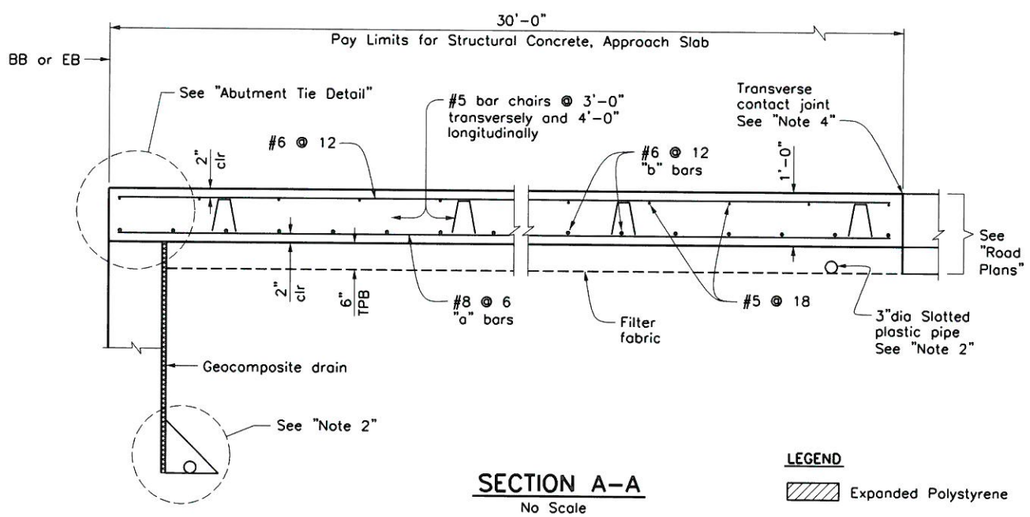

SECTION A-A
No Scale

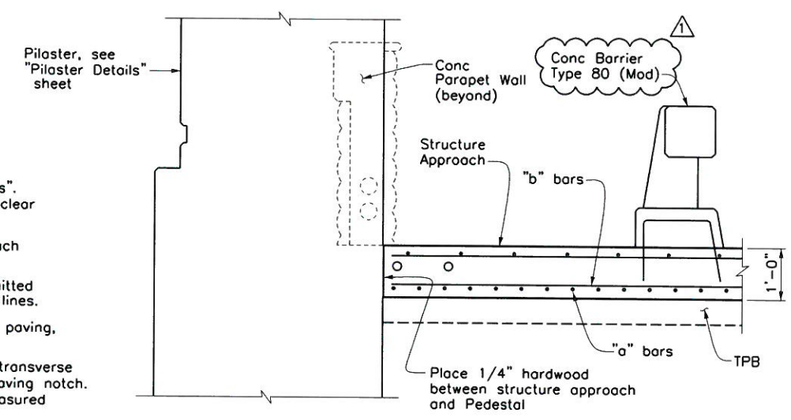

SECTION C-C
No Scale

REGISTERED PROFESSIONAL ENGINEER TODD W. DUDLEY No. 39514 EXP. DATE 12/31/15 CIVIL STATE OF CALIFORNIA

AS-BUILT
Todd W. Dudley 06/10/14

LEGEND

Expanded Polystyrene

NOTES:

1. For details not shown, see "Structure Plans". For MR ≤ 2", adjust bar reinforcement to clear a sawcut for sealed joint, when required.
2. For drainage details, see "Structure Approach Drainage Details" sheet.
3. Longitudinal construction joints, when permitted by the Engineer, shall be located on lane lines.
4. For transverse contact joint with new PCC paving, refer to Standard Plan A35-A.
5. At the Contractor's option, approach slab transverse reinforcement may be placed parallel to paving notch. Spacing of transverse reinforcement is measured along ℄ Roadway.
6. Extend 2"Ø Conduits to end of Structure Approach and cap ends.

BENCHMARK

S.P.S.N. 00586
6'x 6' CONC POST WITH DRIVE PIN LOCATED 1 MILE S.E. ALONG S.F.RR FROM RR CROSSING AT BOULDER AVE., AT SOUTH END OF ST. HWY R/W FENCE, 23.5 FT. NORTH OF NORTH RAIL OF RR, 41 FT. EAST OF BOULDER AVE., NORTHBOUND TRAFFIC LANE, 12 FT. NORTH OF CULVERT HEADWALL.
ELEV. = 1353.459'

REGISTERED PROFESSIONAL ENGINEER MOHAN S. CHAR No. 57894 Exp. 6/30/14 CIVIL STATE OF CALIFORNIA

SUBMITTED BY: MSchar DATE: 6-16-11

PLANS PREPARED BY:
AECOM
901 VIA PIEMONTE, 5TH FLOOR
ONTARIO, CALIFORNIA 91764

REVISIONS

MARK	DESCRIPTION	APPR.	DATE
1	AS-BUILT REVISIONS	TD	6/10/14

CITY OF HIGHLAND

DESIGNED BY KG | DRAWN BY RA | CHECKED BY MC
SUBMITTED BY TODD DUDLEY
RECOMMENDED BY MOHAN CHAR 10/4/11
MOHAN S. CHAR R.C.E. 57894 EXP. 6-30-14 DATE
APPROVED BY Ernest Wong 10.6.11
ERNEST WONG, CITY ENGINEER R.C.E. 37413 EXP. 6-30-14 DATE

BOULDER AVENUE BRIDGE OVER CITY CREEK (REPLACEMENT)

STRUCTURE APROACH TYPE N(30S)

DRAWER NO.

SHEET 26 OF 36

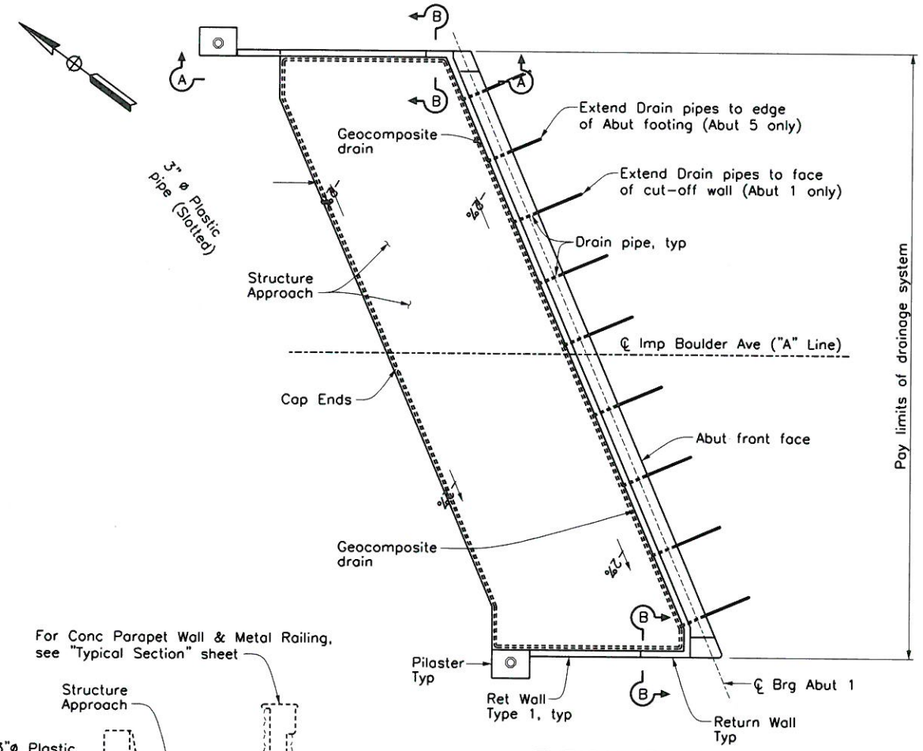

TYPICAL PLAN

No Scale

(Abut 1 shown, Abut 5 similar)

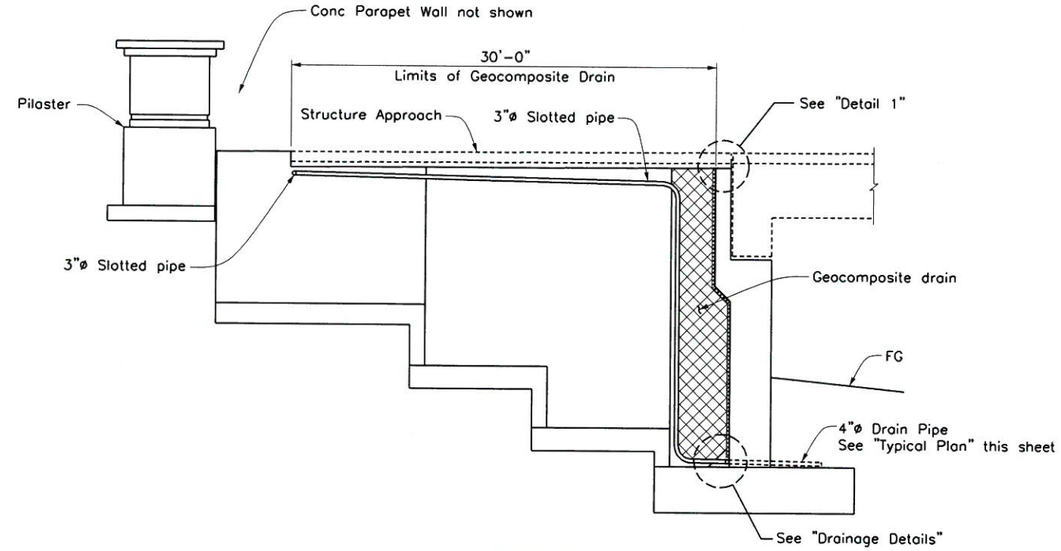

SECTION A–A

No Scale

(Abut 1 Left shown, other locations similar)

Notes:

1. Bends and junctions in 3"ø plastic pipe are 30" radius min.
2. Geocomposite drain, cement treated permeable base, and 3"ø slotted plastic pipe continuous behind Abutment and Wingwalls. Provide "Tee" connection at 4"ø drain pipe.

REGISTERED PROFESSIONAL ENGINEER TODD W. DUDLEY No. 39514 EXP. DATE 12/31/15 CIVIL STATE OF CALIFORNIA

AS-BUILT 06/10/14

NO AS-BUILT CHANGES

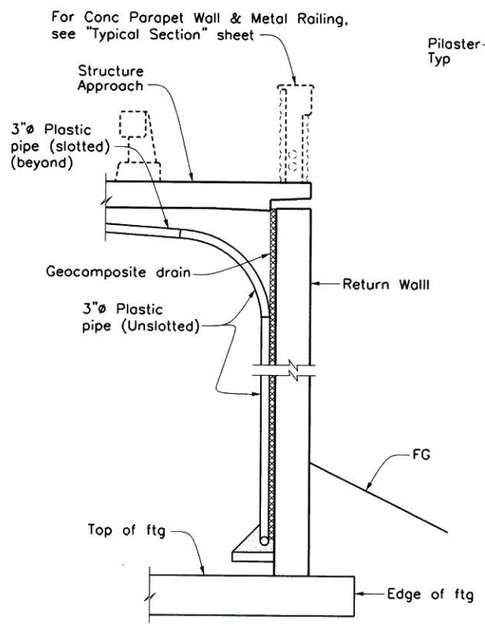

SECTION B–B

No Scale

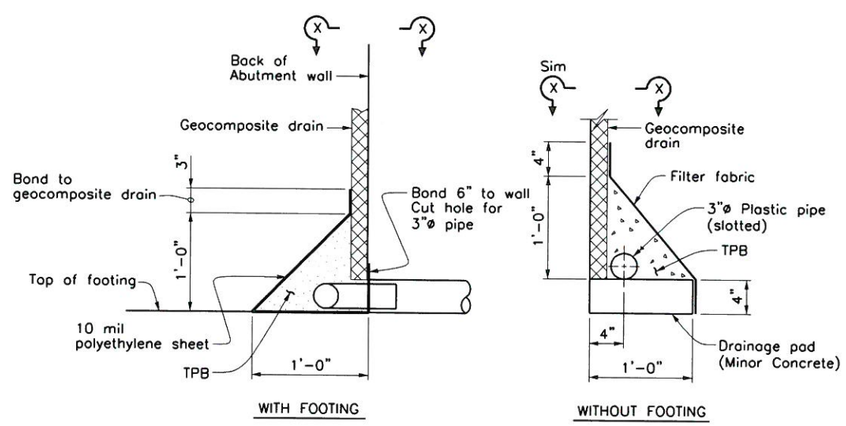

DRAINAGE DETAILS

No Scale

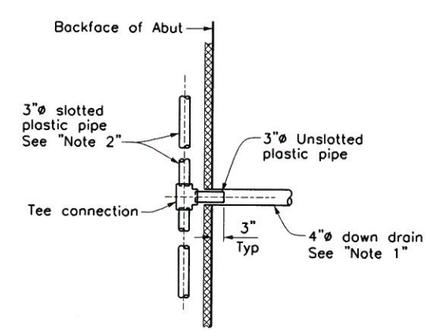

SECTION X–X

No Scale

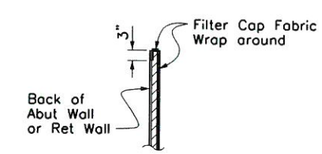

DETAIL 1

No Scale

BENCHMARK

S.P.S.N. 00586
6'x 6' CONC POST WITH DRIVE PIN LOCATED 1 MILE S.E. ALONG S.F.RR FROM RR CROSSING AT BOULDER AVE., AT SOUTH END OF ST. HWY R/W FENCE, 23.5 FT. NORTH OF NORTH RAIL OF RR, 41 FT. EAST OF BOULDER AVE., NORTHBOUND TRAFFIC LANE, 12 FT. NORTH OF CULVERT HEADWALL.
ELEV. = 1353.459'

REGISTERED PROFESSIONAL ENGINEER MOHAN S. CHAR No. 57894 Exp. 6/30/14 CIVIL STATE OF CALIFORNIA

SUBMITTED BY: MSchar DATE: 6-16-11

PLANS PREPARED BY:
AECOM
901 VIA PIEMONTE, 5TH FLOOR
ONTARIO, CALIFORNIA 91764

REVISIONS

MARK	DESCRIPTION	APPR.	DATE
1	AS BUILT PLANS	TD	6/10/14

CITY OF HIGHLAND

DESIGNED BY KG | DRAWN BY RA | CHECKED BY MC
SUBMITTED BY TODD DUDLEY
RECOMMENDED BY MOHAN CHAR 10/4/11
MOHAN S. CHAR R.C.E. 57894 EXP. 6-30-14 DATE
APPROVED BY 10.6.11
ERNEST WONG, CITY ENGINEER R.C.E. 37413 EXP. 6-30-14 DATE

BOULDER AVENUE BRIDGE OVER CITY CREEK (REPLACEMENT)

STRUCTURE APPROACH DRAINAGE DETAILS

DRAWER NO.

SHEET 27 OF 36

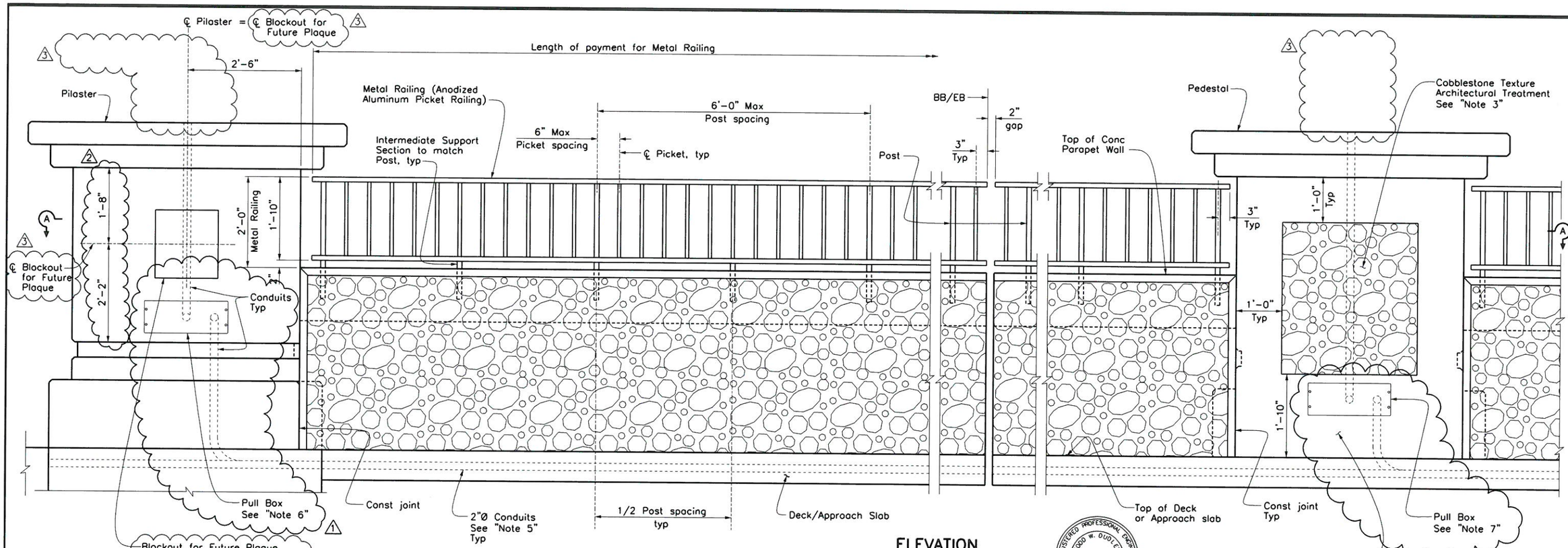

ELEVATION

1" = 1'-0"

(Inside face of Conc Parapet Wall shown)

REGISTERED PROFESSIONAL ENGINEER 10/00 W. DUDLEY No. 39514 EXP. DATE 12/31/13 CIVIL STATE OF CALIFORNIA

AS-BUILT
Todd W. Dudley 08/10/14

Notes:

1. See "Structure Approach Type N(30S)" sheet for Conc Parapet Wall details at Bridge Approaches.
2. All rough edges on posts and rails shall be ground smooth.
3. For details see "Cobblestone Texture" on "Concrete Parapet Railing Details No. 2" sheet.
4. For pilaster details, see "Pilaster Details" sheet.
5. For 2" Conduit location and details, see "Typical Section" & "Structure Approach Type N(30S)" sheets.

Notes: (Cont.)

6. For pull box location, see "Section C-C" on "Pilaster Details" sheet. For pull box type, see "Electrical Plans".
7. 6. For pull box location, see "Section C-C" on "Pedestal Details" sheet. For pull box type, see "Electrical Plans".

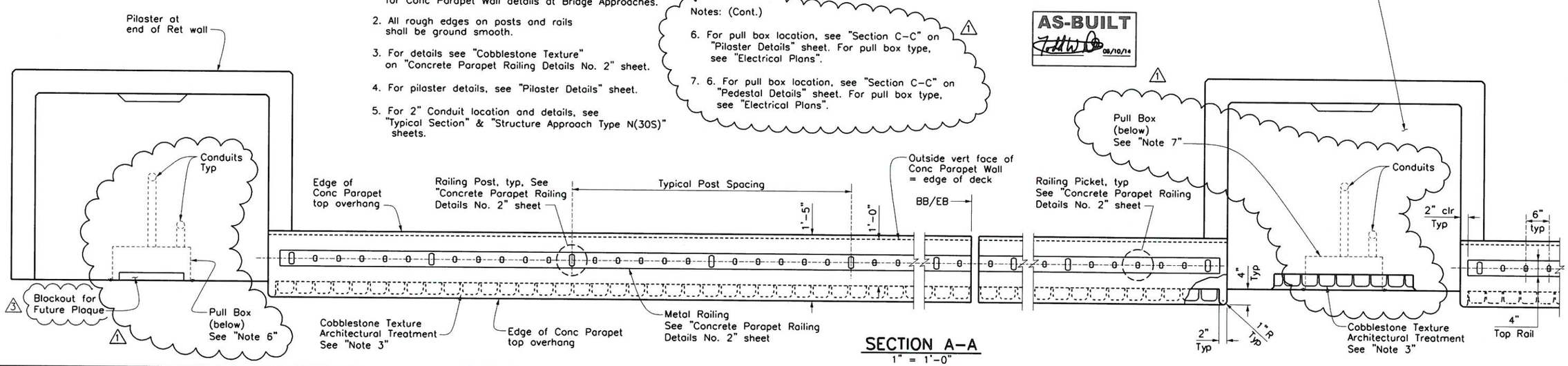

SECTION A-A

1" = 1'-0"

BENCHMARK

S.P.S.N. 00586
6'x 6' CONC POST WITH DRIVE PIN LOCATED 1 MILE S.E. ALONG S.F.RR FROM RR CROSSING AT BOULDER AVE., AT SOUTH END OF ST. HWY R/W FENCE, 23.5 FT. NORTH OF NORTH RAIL OF RR, 41 FT. EAST OF BOULDER AVE., NORTHBOUND TRAFFIC LANE, 12 FT. NORTH OF CULVERT HEADWALL.
ELEV. = 1353.459'

REGISTERED PROFESSIONAL ENGINEER MOHAN S. CHAR No. 57894 Exp. 6/30/14 CIVIL STATE OF CALIFORNIA

SUBMITTED BY: MSchar DATE: 6-16-11

PLANS PREPARED BY:
AECOM
901 VIA PIEMONTE, 5TH FLOOR
ONTARIO, CALIFORNIA 91764

REVISIONS

MARK	DESCRIPTION	APPR.	DATE
1	CCO#2 Added Pull box, conduits & Notes	MC	9/04/12
2	CCO#2 Raised Plaque location	MC	9/04/12
3	AS-BUILT REVISIONS	TD	6/10/14

CITY OF HIGHLAND

DESIGNED BY KG | DRAWN BY RA | CHECKED BY MC
SUBMITTED BY TODD DUDLEY
RECOMMENDED BY MOHAN CHAR 10/4/11
MOHAN S. CHAR R.C.E. 57894 EXP. 6-30-14 DATE
APPROVED BY Ernest Wong 10.6.11
ERNEST WONG, CITY ENGINEER R.C.E. 37413 EXP. 6-30-14 DATE

BOULDER AVENUE BRIDGE OVER CITY CREEK (REPLACEMENT)

CONCRETE PARAPET RAILING DETAILS No. 1

DRAWER NO.

SHEET 28R1 OF 36

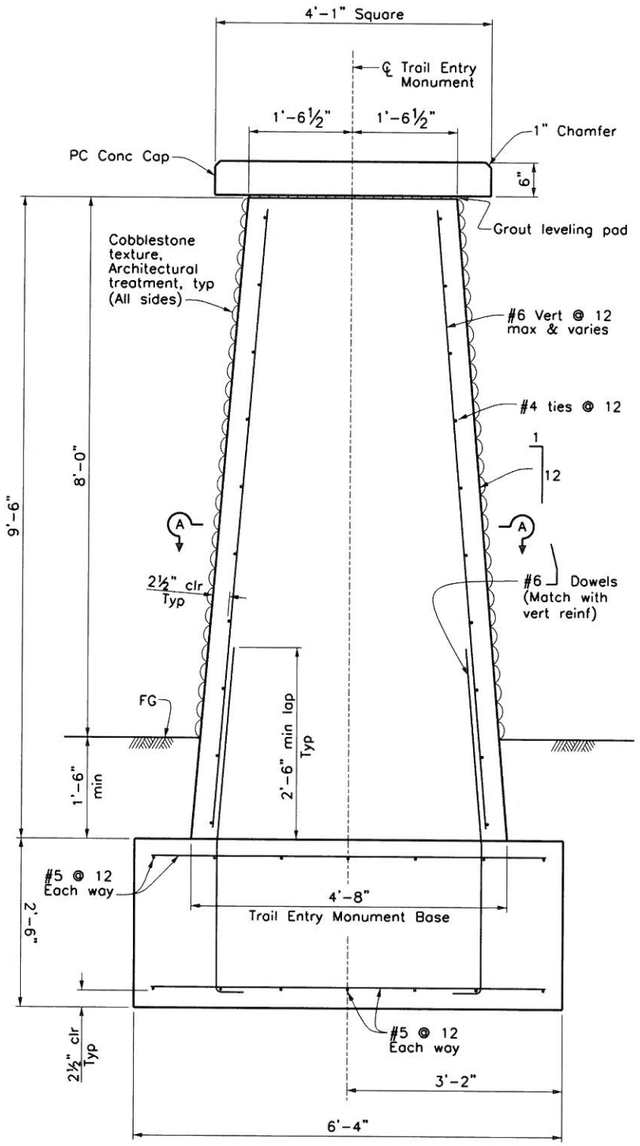

TRAIL ENTRY MONUMENT ELEVATION
1" = 1'-0"

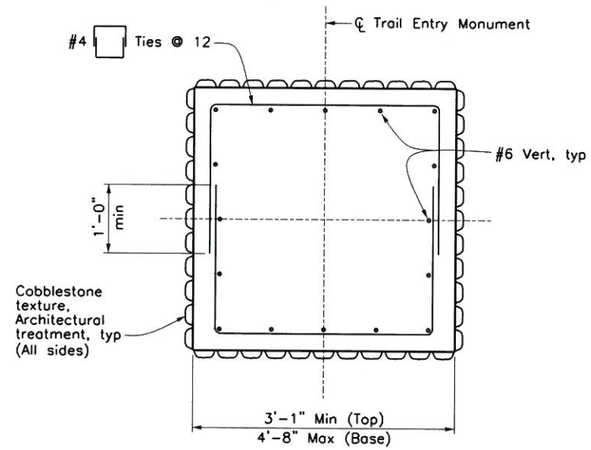

SECTION A-A
¾" = 1'-0"

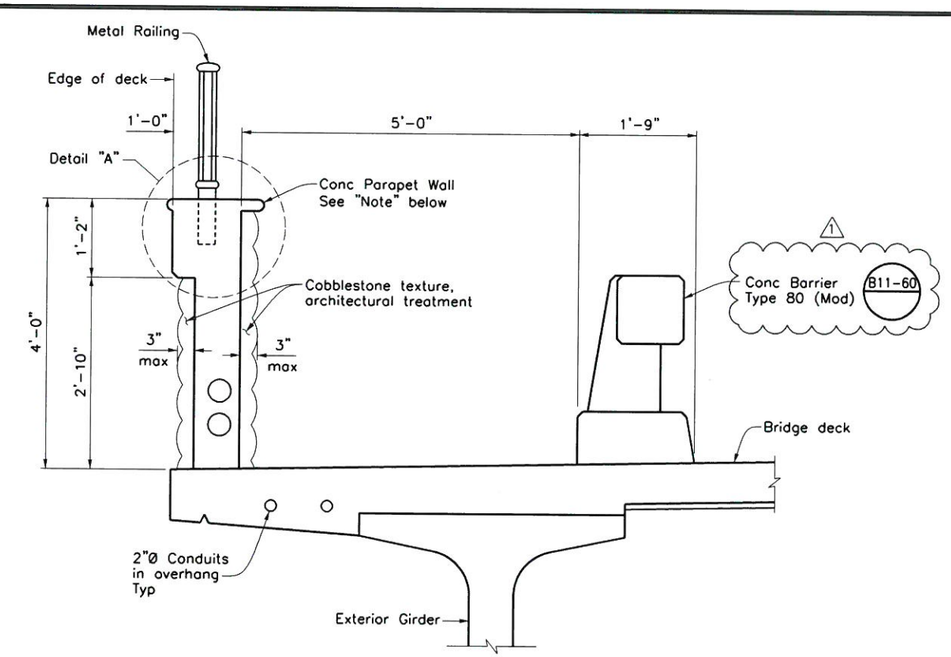

TYPICAL CONCRETE PARAPET SECTION
1" = 1'-0"

Note:
For Conc Parapet Wall reinf, see "Typical Section" sheet.

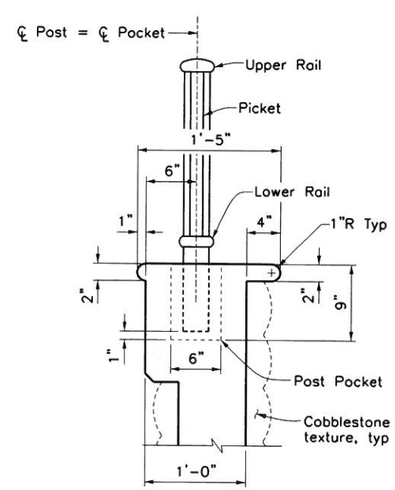

DETAIL A
No Scale

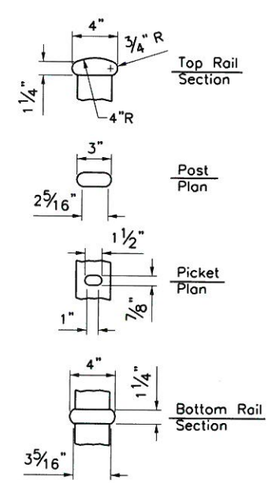

RAIL-POST-PICKET DETAILS
No Scale

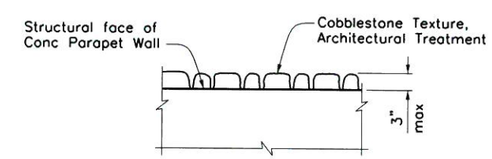

SECTION B-B

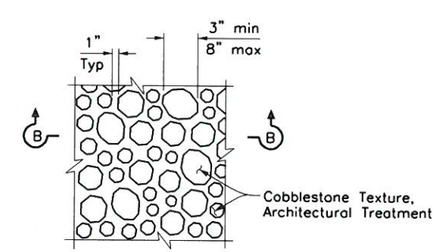

PART ELEVATION

COBBLESTONE TEXTURE
No Scale

REGISTERED PROFESSIONAL ENGINEER TODD W. DUDLEY No. 39514 EXP. DATE 12/31/15 CIVIL STATE OF CALIFORNIA

AS-BUILT 08/10/14

BENCHMARK
S.P.S.N. 00586
6'x 6' CONC POST WITH DRIVE PIN LOCATED 1 MILE S.E. ALONG S.F.RR FROM RR CROSSING AT BOULDER AVE., AT SOUTH END OF ST. HWY R/W FENCE, 23.5 FT. NORTH OF NORTH RAIL OF RR, 41 FT. EAST OF BOULDER AVE., NORTHBOUND TRAFFIC LANE, 12 FT. NORTH OF CULVERT HEADWALL.
ELEV. = 1353.459'

REGISTERED PROFESSIONAL ENGINEER MOHAN S. CHAR No. 57894 Exp. 6/30/14 CIVIL STATE OF CALIFORNIA

SUBMITTED BY: MSchar DATE: 6-16-11

PLANS PREPARED BY:
AECOM
901 VIA PIEMONTE, 5TH FLOOR
ONTARIO, CALIFORNIA 91764

REVISIONS			
1	AS-BUILT REVISIONS	TD	6/10/14
MARK	DESCRIPTION	APPR.	DATE

CITY OF HIGHLAND

DESIGNED BY	DRAWN BY	CHECKED BY
KG	RA	MC

SUBMITTED BY: TODD DUDLEY
RECOMMENDED BY: MOHAN CHAR 10/4/11
MOHAN S. CHAR R.C.E. 57894 EXP. 6-30-14 DATE
APPROVED BY: 10.6.11
ERNEST WONG, CITY ENGINEER R.C.E. 37413 EXP. 6-30-14 DATE

BOULDER AVENUE BRIDGE OVER CITY CREEK (REPLACEMENT)

CONCRETE PARAPET RAILING DETAILS No. 2

DRAWER NO.

SHEET 29 OF 36

Notes:

1. Vertical edge to be tangent to 1'-6" radius curve and perpendicular to overhang slab extension.
2. See "Electrical Plans" for Conduit placement and Pull Box locations. Adjust reinforcement as necessary to clear obstructions.
3. For Cobblestone Texture details, see "Concrete Parapet Railing Details No. 2" sheet.

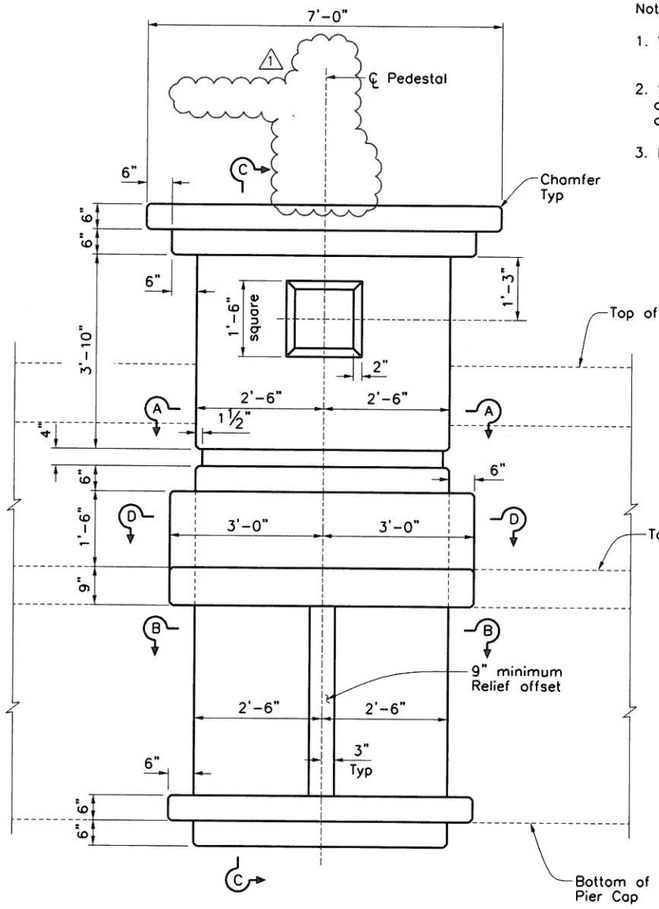

PEDESTAL ELEVATION
¾" = 1'-0"
(Looking towards edge of deck)

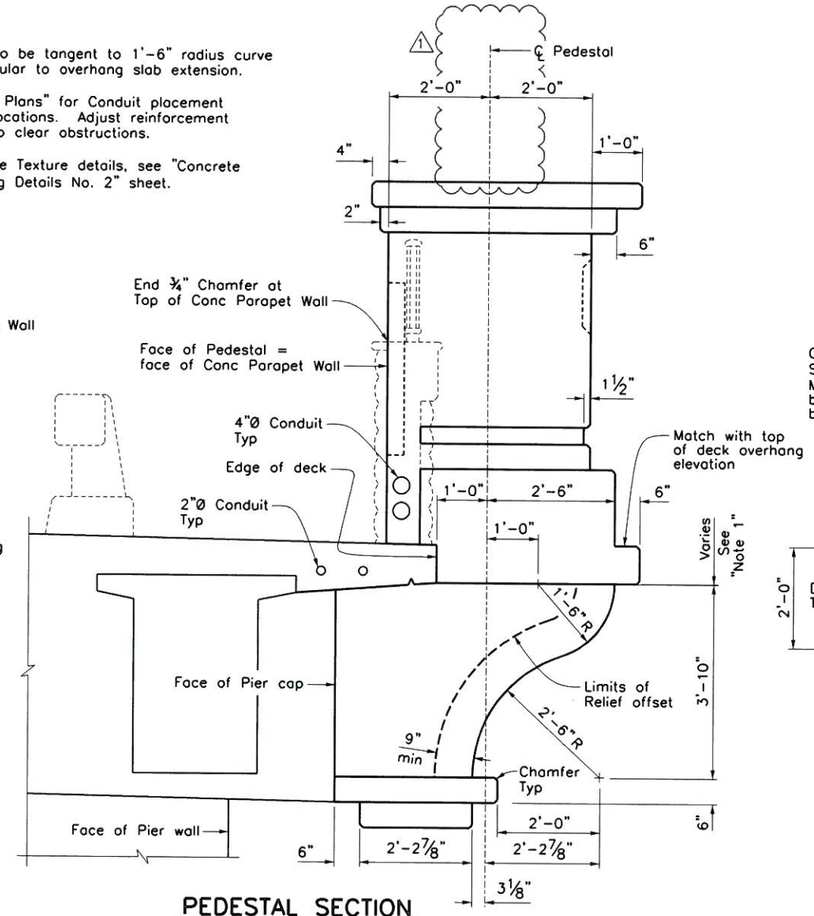

PEDESTAL SECTION
¾" = 1'-0"
(Looking upstation)

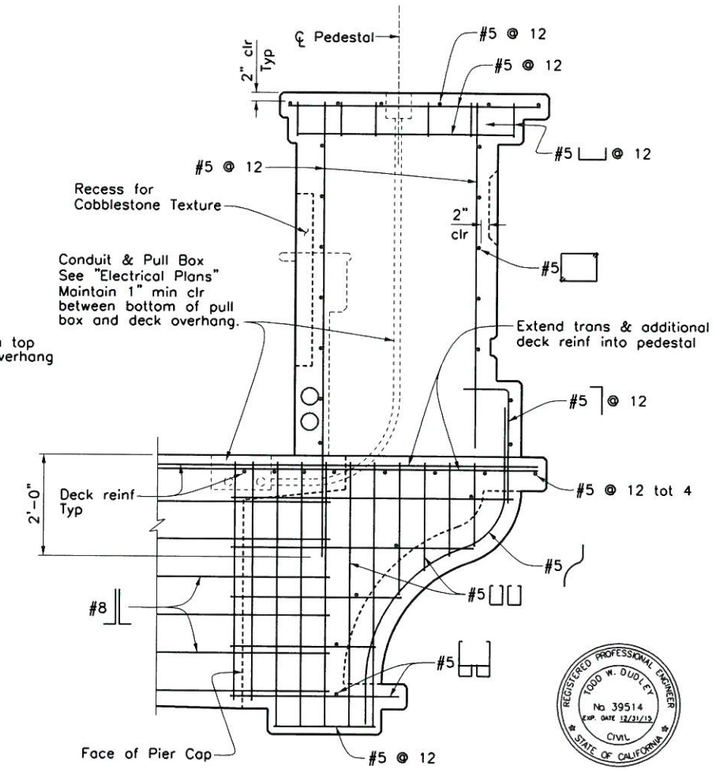

SECTION C-C
¾" = 1'-0"

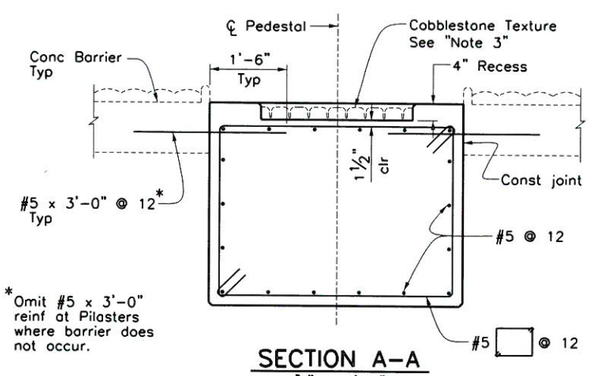

SECTION A-A
¾" = 1'-0"

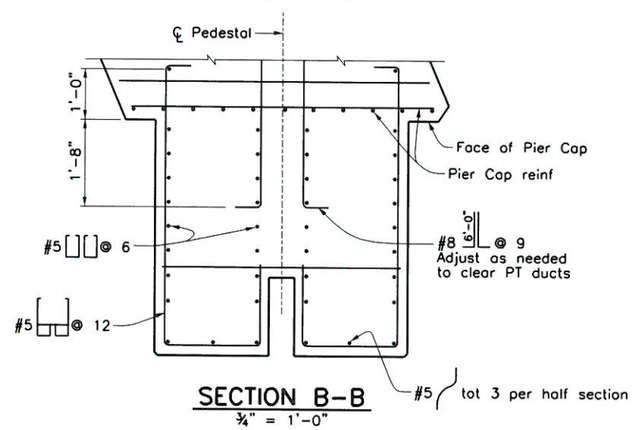

SECTION B-B
¾" = 1'-0"

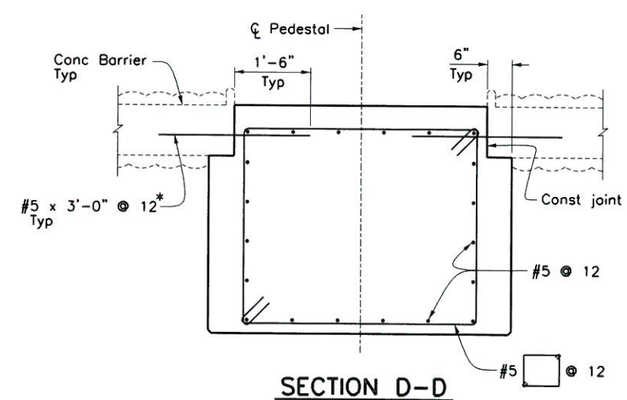

SECTION D-D
¾" = 1'-0"

REGISTERED PROFESSIONAL ENGINEER TODD W. DUDLEY No 39514 EXP. DATE 12/31/12 CIVIL STATE OF CALIFORNIA

AS-BUILT 08/10/14

BENCHMARK

S.P.S.N. 00586
6"x 6" CONC POST WITH DRIVE PIN LOCATED 1 MILE S.E. ALONG S.F.RR FROM RR CROSSING AT BOULDER AVE., AT SOUTH END OF ST. HWY R/W FENCE, 23.5 FT. NORTH OF NORTH RAIL OF RR, 41 FT. EAST OF BOULDER AVE., NORTHBOUND TRAFFIC LANE, 12 FT. NORTH OF CULVERT HEADWALL.
ELEV. = 1353.459'

REGISTERED PROFESSIONAL ENGINEER MOHAN S. CHAR No. 57894 Exp. 6/30/14 CIVIL STATE OF CALIFORNIA

SUBMITTED BY: MSchar DATE: 6-16-11

PLANS PREPARED BY:
AECOM
901 VIA PIEMONTE, 5TH FLOOR
ONTARIO, CALIFORNIA 91764

REVISIONS

MARK	DESCRIPTION	APPR.	DATE
1	AS-BUILT REVISIONS	TD	6/10/14

CITY OF HIGHLAND

DESIGNED BY KG | DRAWN BY RA | CHECKED BY MC
SUBMITTED BY TODD DUDLEY
RECOMMENDED BY MOHAN CHAR 10/4/11
MOHAN S. CHAR R.C.E. 57894 EXP. 6-30-14 DATE
APPROVED BY Ernest Wong 10.6.11
ERNEST WONG, CITY ENGINEER R.C.E. 37413 EXP. 6-30-14 DATE

BOULDER AVENUE BRIDGE OVER CITY CREEK (REPLACEMENT)

PEDESTAL DETAILS

DRAWER NO.

SHEET 30 OF 36

Notes:

1. For "Section A–A", see "Pedestal Details" sheet.
2. See "Electrical Plans" for Conduit placement and Pull Box locations. Adjust reinforcement as necessary to clear obstructions.
3. For light pole blockout and anchorage details, see "Construction Sequence" sheet.

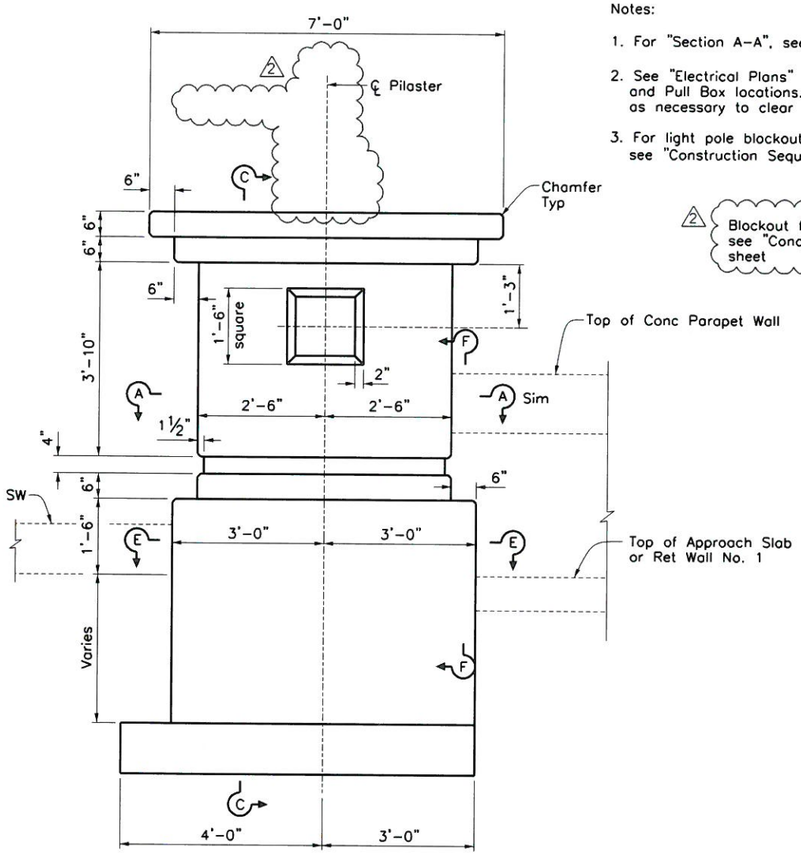

PILASTER ELEVATION

¾" = 1'-0"

(Looking at exterior face)

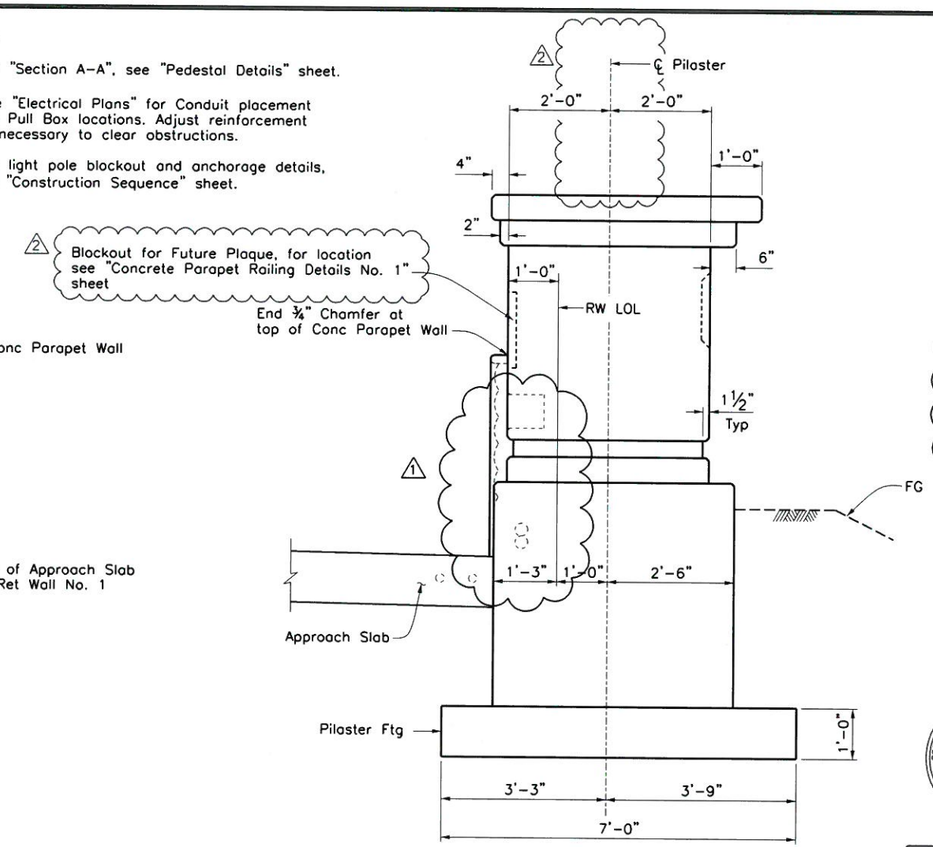

PILASTER SECTION

¾" = 1'-0"

(Looking upstation)

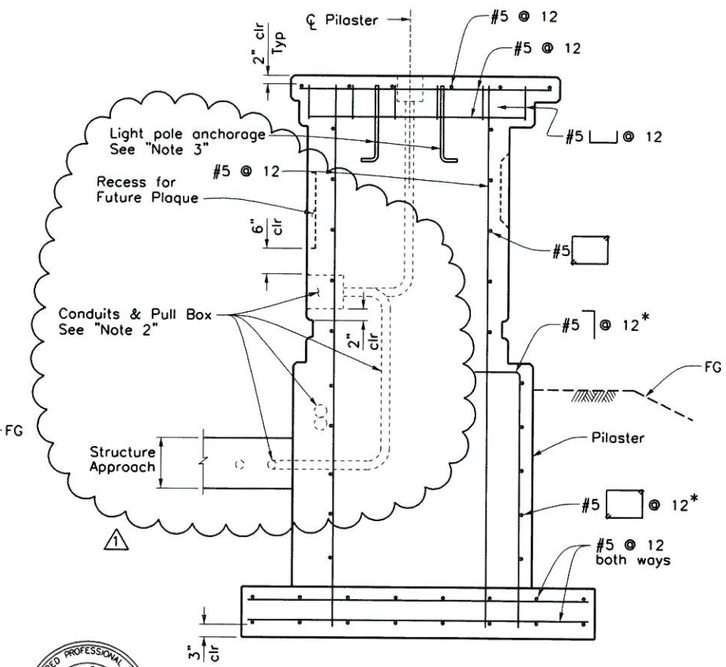

SECTION C–C

¾" = 1'-0"

REGISTERED PROFESSIONAL ENGINEER TODD W. DUDLEY No. 39514 EXP. DATE 12/31/13 CIVIL STATE OF CALIFORNIA

AS-BUILT

Todd W. Dudley 08/10/14

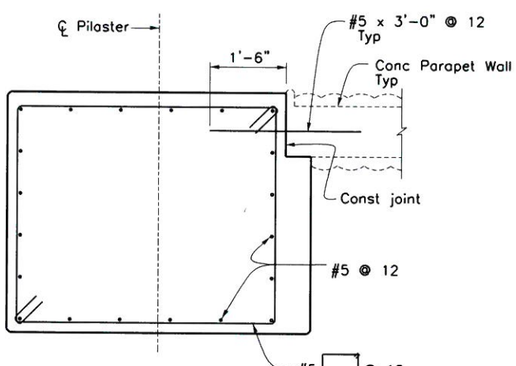

SECTION E–E

¾" = 1'-0"

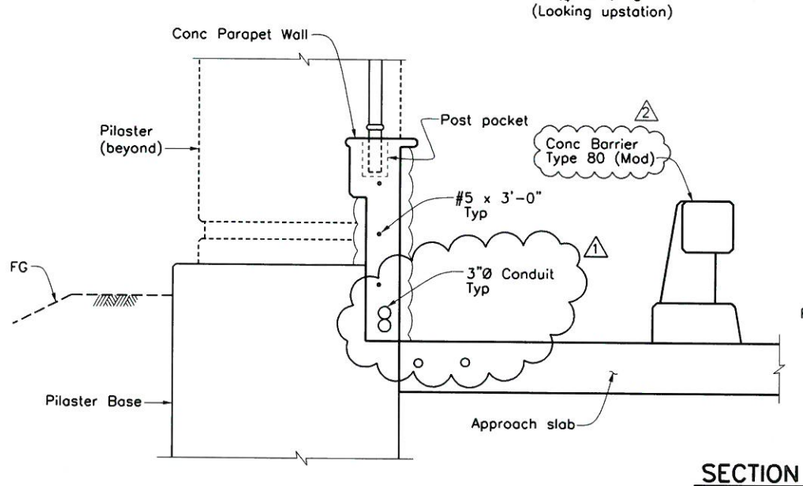

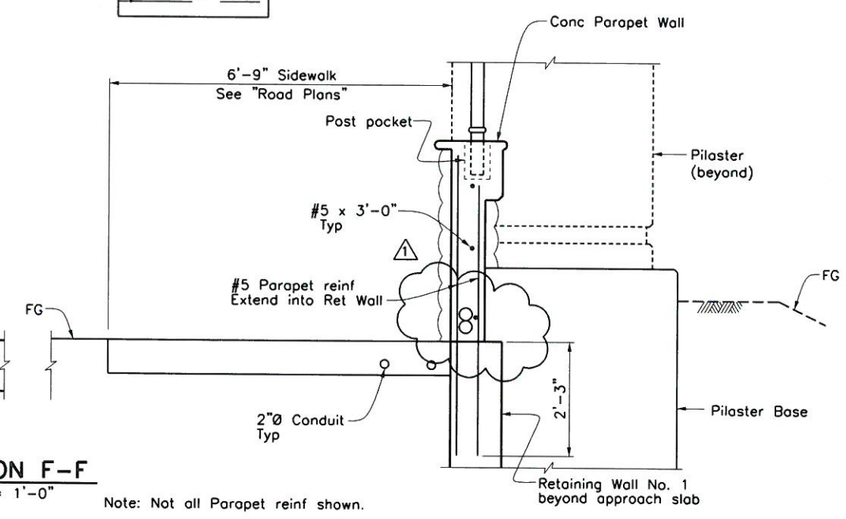

SECTION F–F

¾" = 1'-0"

Note: Not all Parapet reinf shown.

BENCHMARK

S.P.S.N. 00586
6'x 6' CONC POST WITH DRIVE PIN LOCATED
1 MILE S.E. ALONG S.F.RR FROM RR CROSSING
AT BOULDER AVE., AT SOUTH END OF ST. HWY
R/W FENCE, 23.5 FT. NORTH OF NORTH RAIL OF RR,
41 FT. EAST OF BOULDER AVE., NORTHBOUND
TRAFFIC LANE, 12 FT. NORTH OF CULVERT HEADWALL.
ELEV. = 1353.459'

REGISTERED PROFESSIONAL ENGINEER MOHAN S. CHAR No. 57894 Exp. 6/30/14 CIVIL STATE OF CALIFORNIA

SUBMITTED BY: MSchar DATE: 6-16-11

PLANS PREPARED BY:

AECOM
901 VIA PIEMONTE, 5TH FLOOR
ONTARIO, CALIFORNIA 91764

REVISIONS

MARK	DESCRIPTION	APPR.	DATE
1	CCO#2 Revised Pull box & 3" conduits	MC	9/04/12
2	AS-BUILT REVISIONS	TD	6/10/14

CITY OF HIGHLAND

DESIGNED BY KG | DRAWN BY RA | CHECKED BY MC

SUBMITTED BY: TODD DUDLEY

RECOMMENDED BY: MOHAN CHAR 10/4/11
MOHAN S. CHAR DATE
R.C.E. 57894 EXP. 6-30-14

APPROVED BY: Ernest Wong 8.17.12
ERNEST WONG, CITY ENGINEER DATE
R.C.E. 37413 EXP. 6-30-14

BOULDER AVENUE BRIDGE OVER CITY CREEK (REPLACEMENT)

PILASTER DETAILS

DRAWER NO.

SHEET 31R1 OF 36

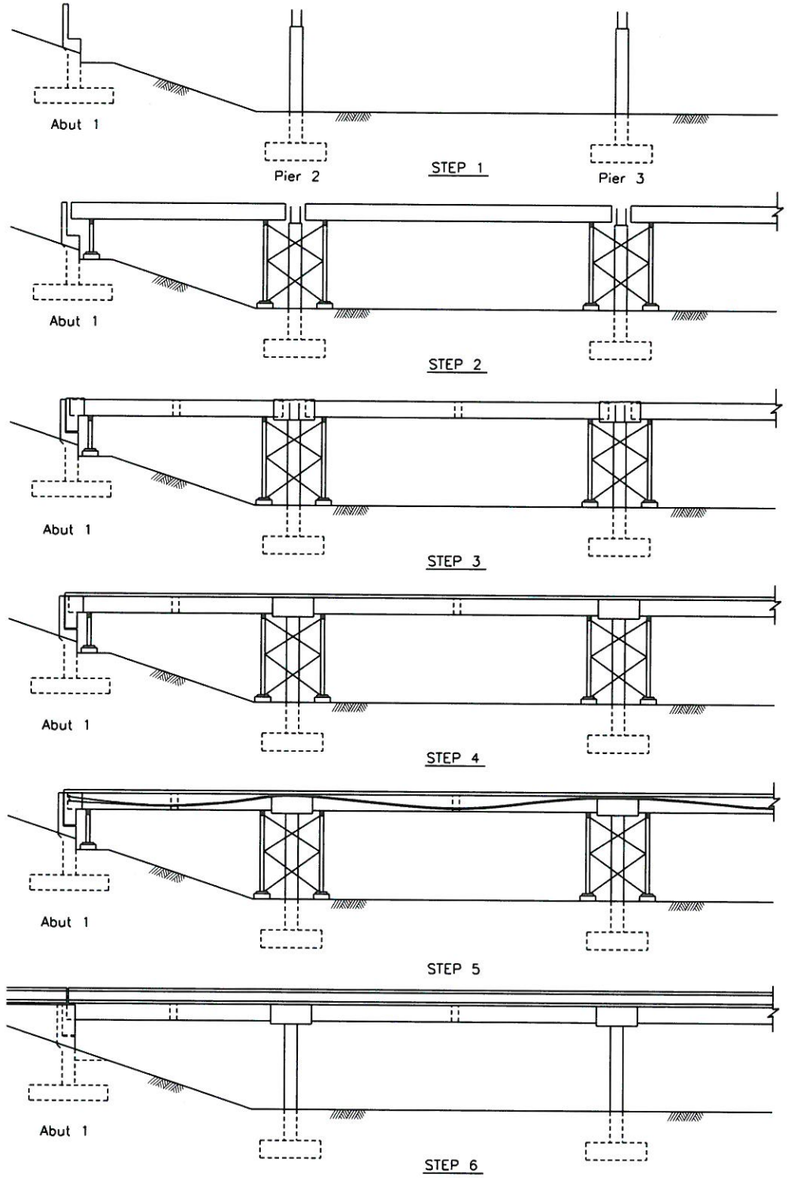

DESIGN BASED CONSTRUCTION SEQUENCE

No Scale

DESIGN ASSUMED BRIDGE CONSTRUCTION SEQUENCE

Step 1

Construct abutments, footings & piers.

Step 2

Erect girders on temporary supports. Temporary support locations to be immediately adjacent to pier cap edge forms.

Step 3

Form and pour the cast-in-place bent caps, abutment diaphragms, and intermediate diaphragms.

Step 4

Using stay-in-place deck forms, pour cast-in-place deck.

Step 5

Apply post-tensioning and grout tendons.

Step 6

Remove temporary supports. Place backwall and backfill. Install median curb, barriers, concrete parapet walls, railings, utilities and other deck fixtures.

Note:

The construction sequence shown is for information only and was the assumed sequence used in the design process. This does not relieve the Contractor from the responsibility to submit a construction sequence plan to be approved by the Engineer.

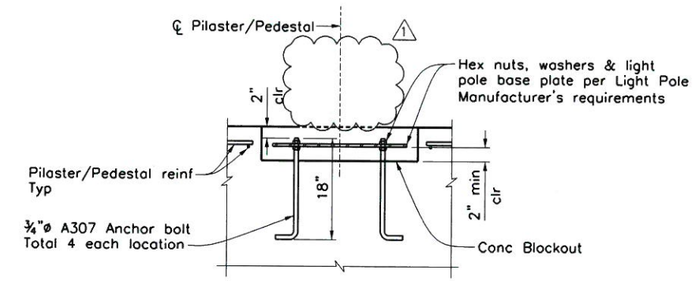

SECTION

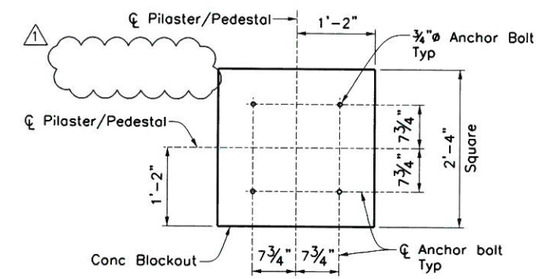

PLAN

LIGHT POLE ANCHORAGE DETAILS

No Scale

REGISTERED PROFESSIONAL ENGINEER TODD W. DUDLEY No 39514 EXP. DATE 12/31/15 CIVIL STATE OF CALIFORNIA

AS-BUILT
Todd W. Dudley 08/10/14

BENCHMARK

S.P.S.N. 00586
6"x 6" CONC POST WITH DRIVE PIN LOCATED 1 MILE S.E. ALONG S.F.RR FROM RR CROSSING AT BOULDER AVE., AT SOUTH END OF ST. HWY R/W FENCE, 23.5 FT. NORTH OF NORTH RAIL OF RR, 41 FT. EAST OF BOULDER AVE., NORTHBOUND TRAFFIC LANE, 12 FT. NORTH OF CULVERT HEADWALL.
ELEV. = 1353.459'

REGISTERED PROFESSIONAL ENGINEER MOHAN S. CHAR No. 57894 Exp. 6/30/14 CIVIL STATE OF CALIFORNIA

SUBMITTED BY: MSchar DATE: 6-16-11

PLANS PREPARED BY:
AECOM
901 VIA PIEMONTE, 5TH FLOOR
ONTARIO, CALIFORNIA 91764

REVISIONS

MARK	DESCRIPTION	APPR.	DATE
1	AS-BUILT REVISIONS	TD	6/10/14

CITY OF HIGHLAND

DESIGNED BY KG | DRAWN BY RA | CHECKED BY MC
SUBMITTED BY TODD DUDLEY
RECOMMENDED BY MOHAN CHAR 10/4/11
MOHAN S. CHAR R.C.E. 57894 EXP. 6-30-14 DATE
APPROVED BY E. Wong 10.6.11
ERNEST WONG, CITY ENGINEER R.C.E. 37413 EXP. 6-30-14 DATE

BOULDER AVENUE BRIDGE OVER CITY CREEK (REPLACEMENT)

CONSTRUCTION SEQUENCE

DRAWER NO.

SHEET 32 OF 36

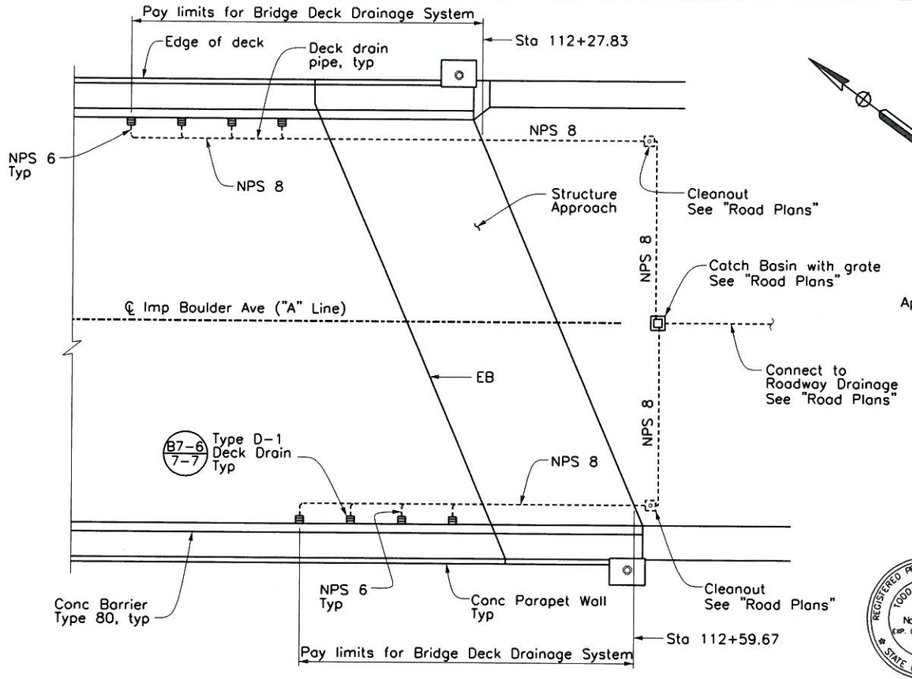

SCHEMATIC DECK DRAIN LAYOUT

No Scale

Note:
For deck drain stations see "Girder Layout" sheet.

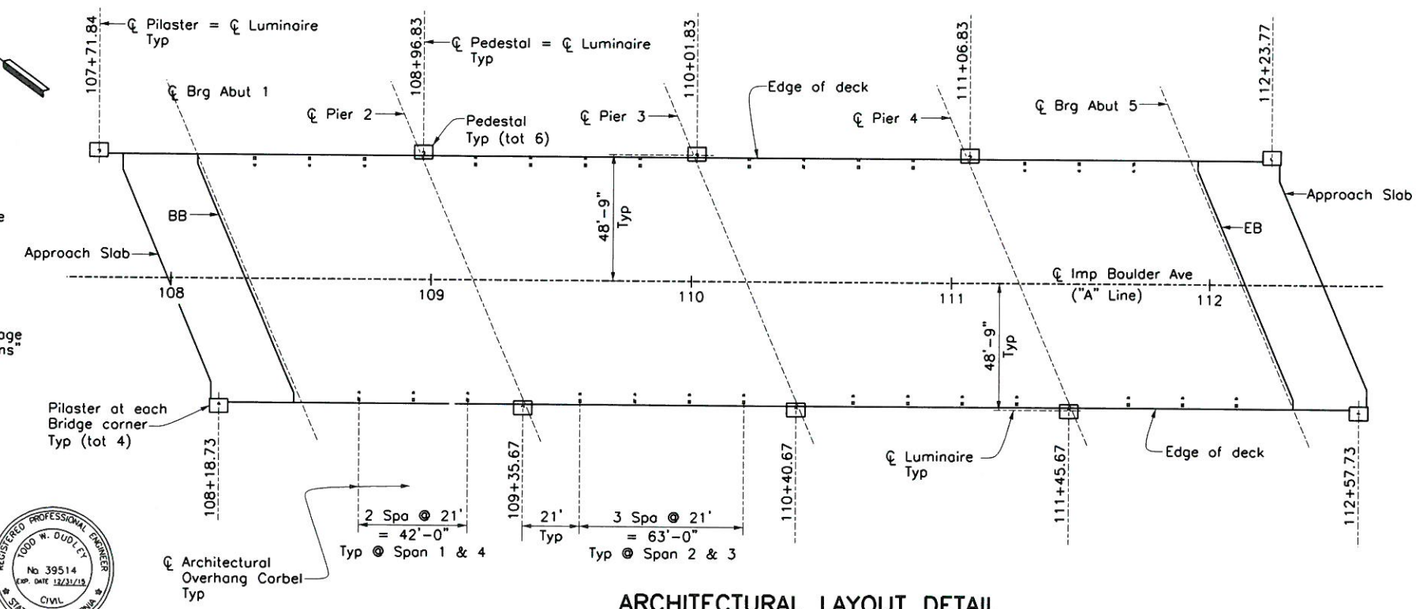

ARCHITECTURAL LAYOUT DETAIL

No Scale

REGISTERED PROFESSIONAL ENGINEER TODD W. DUDLEY No. 39514 EXP. DATE 12/31/15 CIVIL STATE OF CALIFORNIA

AS-BUILT
08/10/14
NO AS-BUILT CHANGES

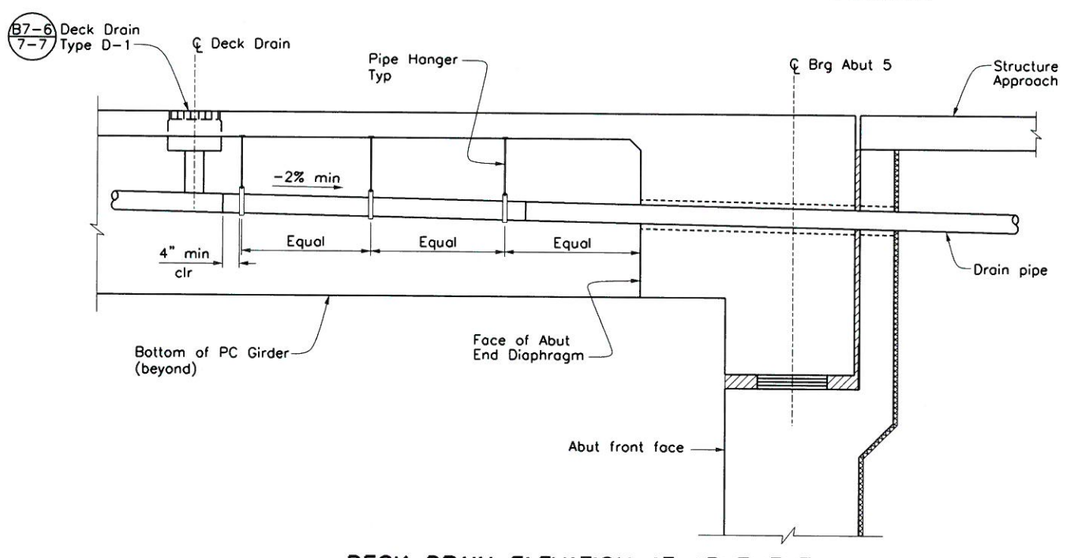

DECK DRAIN ELEVATION AT ABUTMENT

No Scale

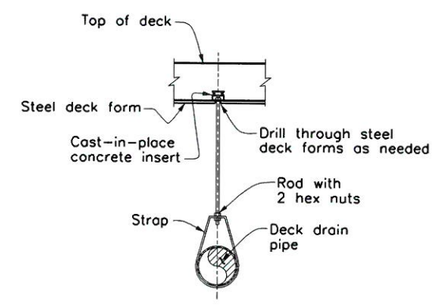

DECK DRAIN PIPE HANGER

No Scale

Note: For details not shown, see B14-5

Pipe Size	Wall Thickness	Hanger Spacing	Hanger Rod Dia	Hanger Strap Size
NPS 6	9/64"	10'-0"	5/8"	3/16" x 1 1/2"
NPS 8	5/32"	10'-0"	3/4"	1/4" x 1 3/4"

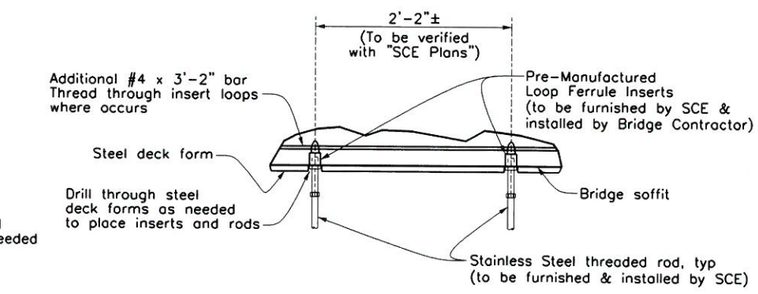

LOOP FERRULE INSERT/THREADED ROD ASSEMBLY

No Scale

Note:
Space Pre-Manufactured Loop Ferrule Insert/Threaded Rod per "SCE Plans". Field adjust locations to avoid conflicts as approved by the Engineer.

UTILITY SCHEDULE			
Utility	Description	Intermediate & End Diaphragm Openings	Pier Diaphragm Opening
3 *	Electrical (SCE)	26"W x 18"H	26"W x 18"H
–	Deck drain	14" Dia	–
–	Future Utility	26" Dia	26" Dia

* See "Typical Section" sheet

BENCHMARK
S.P.S.N. 00586
6"x 6" CONC POST WITH DRIVE PIN LOCATED 1 MILE S.E. ALONG S.F.RR FROM RR CROSSING AT BOULDER AVE., AT SOUTH END OF ST. HWY R/W FENCE, 23.5 FT. NORTH OF NORTH RAIL OF RR, 41 FT. EAST OF BOULDER AVE., NORTHBOUND TRAFFIC LANE, 12 FT. NORTH OF CULVERT HEADWALL.
ELEV. = 1353.459'

REGISTERED PROFESSIONAL ENGINEER MOHAN S. CHAR No. 57894 Exp. 6/30/14 CIVIL STATE OF CALIFORNIA

SUBMITTED BY: DATE: 6-16-11

PLANS PREPARED BY:
AECOM
901 VIA PIEMONTE, 5TH FLOOR
ONTARIO, CALIFORNIA 91764

REVISIONS

MARK	DESCRIPTION	APPR.	DATE
1	AS BUILT PLANS	TD	6/10/14

CITY OF HIGHLAND

DESIGNED BY	DRAWN BY	CHECKED BY
KG	RA	MC

SUBMITTED BY: TODD DUDLEY
RECOMMENDED BY: MOHAN CHAR 10/4/11
MOHAN S. CHAR R.C.E. 57894 EXP. 6-30-14 DATE
APPROVED BY: ERNEST WONG, CITY ENGINEER R.C.E. 37413 EXP. 6-30-14 DATE 10.6.11

BOULDER AVENUE BRIDGE OVER CITY CREEK (REPLACEMENT)

UTILITY DETAILS

DRAWER NO.

SHEET 33 OF 36

REFERENCE: CALTRANS SOIL & ROCK LOGGING, CLASSIFICATION, AND PRESENTATION MANUAL (2010)

CEMENTATION	
Description	Criteria
Weak	Crumbles or breaks with handling or little finger pressure.
Moderate	Crumbles or breaks with considerable finger pressure.
Strong	Will not crumble or break with finger pressure.

REGISTERED PROFESSIONAL ENGINEER
V.R. NADESHWARAN
No. GE 2390
Exp. 9/30/11
GEOTECHNICAL
STATE OF CALIFORNIA

AS-BUILT
V.R. Nadeswaran 05/10/14
NO AS-BUILT CHANGES

BOREHOLE IDENTIFICATION		
Symbol	Hole Type	Description
Size	A	Auger Boring (hollow or solid stem bucket)
Size	R RW RC P	Rotary drilled boring (conventional) Rotary drilled with self-casing wire-line Rotary core with continuously-sampled, self-casing wire-line Rotary percussion boring (air)
Size	R	Rotary drilled diamond core
Size	HD HA	Hand driven (1-inch soil tube) Hand Auger
●	D	Dynamic Cone Penetration Boring
▲	CPT	Cone Penetration Test (ASTM D 5778)
□	O	Other (note on LOTB)
Note: Size in inches.		

CONSISTENCY OF COHESIVE SOILS				
Description	Shear Strength (tsf)	Pocket Penetrometer Measurement, PP, (tsf)	Torvane Measurement, TV, (tsf)	Vane Shear Measurement, VS, (tsf)
Very Soft	Less than 0.12	Less than 0.25	Less than 0.12	Less than 0.12
Soft	0.12 - 0.25	0.25 - 0.5	0.12 - 0.25	0.12 - 0.25
Medium Stiff	0.25 - 0.5	0.5 - 1	0.25 - 0.5	0.25 - 0.5
Stiff	0.5 - 1	1 - 2	0.5 - 1	0.5 - 1
Very Stiff	1 - 2	2 - 4	1 - 2	1 - 2
Hard	Greater than 2	Greater than 4	Greater than 2	Greater than 2

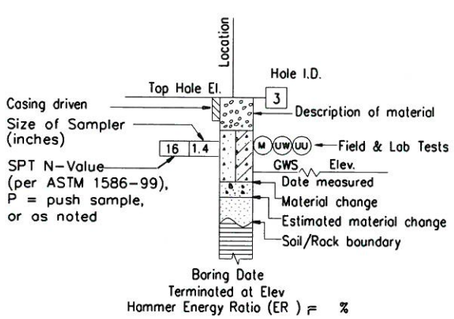

ROTARY BORING

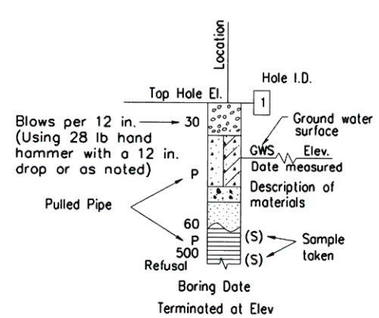

HAND BORING

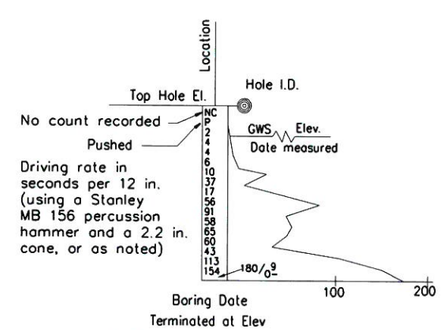

DYNAMIC CONE PENETRATION BORING

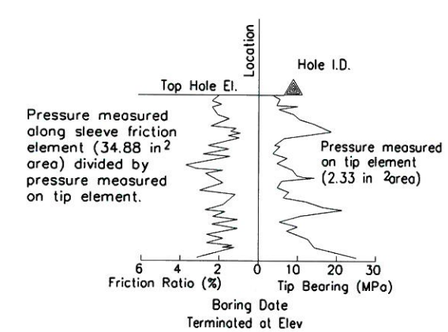

CONE PENETRATION TEST (CPT) BORING

BENCHMARK
S.P.S.N. 00586
6'x 6' CONC POST WITH DRIVE PIN LOCATED 1 MILE S.E. ALONG S.F.RR FROM RR CROSSING AT BOULDER AVE., AT SOUTH END OF ST. HWY R/W FENCE, 23.5 FT. NORTH OF NORTH RAIL OF RR, 41 FT. EAST OF BOULDER AVE., NORTHBOUND TRAFFIC LANE, 12 FT. NORTH OF CULVERT HEADWALL.
ELEV. = 1353.459'

REGISTERED PROFESSIONAL ENGINEER
V.R. NADESHWARAN
No. GE 2390
Exp. 9/30/11
GEOTECHNICAL
STATE OF CALIFORNIA

SUBMITTED BY: V.R. Nadeswaran
DATE: 10-04-11

PLANS PREPARED BY:
DIAZ, YOURMAN & ASSOCIATES
1616 EAST 17TH STREET
SANTA ANA, CA 92705

REVISIONS

MARK	DESCRIPTION	APPR.	DATE
1	AS BUILT PLANS	VRN	6/10/14

CITY OF HIGHLAND
DESIGNED BY AA | DRAWN BY AA | CHECKED BY VN
SUBMITTED BY
RECOMMENDED BY V.R.NADESHWARAN 10/4/11
V.R. NADESHWARAN R.C.E. 2390 EXP. 9-30-11 DATE
APPROVED BY Ernest Wong 10.6.11
ERNEST WONG, CITY ENGINEER R.C.E. 37413 EXP. 6-30-12 DATE

BOULDER AVENUE BRIDGE OVER CITY CREEK (REPLACEMENT)

TERMS AND SYMBOLS FOR BORING LOGS (1 of 2)

DRAWER NO.

SHEET 34 OF 36

REFERENCE: CALTRANS SOIL & ROCK LOGGING, CLASSIFICATION, AND PRESENTATION MANUAL (2010)

GROUP SYMBOLS AND NAMES

Graphic/Symbol	Group Names
GW	Well-graded GRAVEL Well-graded GRAVEL with SAND
GP	Poorly-graded GRAVEL Poorly-graded GRAVEL with SAND
GW-GM	Well-graded GRAVEL with SILT Well-graded GRAVEL with SILT and SAND
GW-GC	Well-graded GRAVEL with CLAY (or SILTY CLAY) Well-graded GRAVEL with CLAY and SAND (or SILTY CLAY and SAND)
GP-GM	Poorly-graded GRAVEL with SILT Poorly-graded GRAVEL with SILT and SAND
GP-GC	Poorly-graded GRAVEL with CLAY (or SILTY CLAY) Poorly-graded GRAVEL with CLAY and SAND (or SILTY CLAY and SAND)
GM	SILTY GRAVEL SILTY GRAVEL with SAND
GC	CLAYEY GRAVEL CLAYEY GRAVEL with SAND
GC-GM	SILTY, CLAYEY GRAVEL SILTY, CLAYEY GRAVEL with SAND
SW	Well-graded SAND Well-graded SAND with GRAVEL
SP	Poorly-graded SAND Poorly-graded SAND with GRAVEL
SW-SM	Well-graded SAND with SILT Well-graded SAND with SILT and GRAVEL
SW-SC	Well-graded SAND with CLAY (or SILTY CLAY) Well-graded SAND with CLAY and GRAVEL (or SILTY CLAY and GRAVEL)
SP-SM	Poorly-graded SAND with SILT Poorly-graded SAND with SILT and GRAVEL
SP-SC	Poorly-graded SAND with CLAY (or SILTY CLAY) Poorly-graded SAND with CLAY and GRAVEL (or SILTY CLAY and GRAVEL)
SM	SILTY SAND SILTY SAND with GRAVEL
SC	CLAYEY SAND CLAYEY SAND with GRAVEL
SC-SM	SILTY, CLAYEY SAND SILTY, CLAYEY SAND with GRAVEL
PT	PEAT
	COBBLES COBBLES and BOULDERS BOULDERS

Graphic/Symbol	Group Names
CL	Lean CLAY Lean CLAY with SAND Lean CLAY with GRAVEL SANDY lean CLAY SANDY lean CLAY with GRAVEL GRAVELLY lean CLAY GRAVELLY lean CLAY with SAND
CL-ML	SILTY CLAY SILTY CLAY with SAND SILTY CLAY with GRAVEL SANDY SILTY CLAY SANDY SILTY CLAY with GRAVEL GRAVELLY SILTY CLAY GRAVELLY SILTY CLAY with SAND
ML	SILT SILT with SAND SILT with GRAVEL SANDY SILT SANDY SILT with GRAVEL GRAVELLY SILT GRAVELLY SILT with SAND
OL	ORGANIC lean CLAY ORGANIC lean CLAY with SAND ORGANIC lean CLAY with GRAVEL SANDY ORGANIC lean CLAY SANDY ORGANIC lean CLAY with GRAVEL GRAVELLY ORGANIC lean CLAY GRAVELLY ORGANIC lean CLAY with SAND
OL	ORGANIC SILT ORGANIC SILT with SAND ORGANIC SILT with GRAVEL SANDY ORGANIC SILT SANDY ORGANIC SILT with GRAVEL GRAVELLY ORGANIC SILT GRAVELLY ORGANIC SILT with SAND
CH	Fat CLAY Fat CLAY with SAND Fat CLAY with GRAVEL SANDY fat CLAY SANDY fat CLAY with GRAVEL GRAVELLY fat CLAY GRAVELLY fat CLAY with SAND
MH	Elastic SILT Elastic SILT with SAND Elastic SILT with GRAVEL SANDY elastic SILT SANDY elastic SILT with GRAVEL GRAVELLY elastic SILT GRAVELLY elastic SILT with SAND
OH	ORGANIC fat CLAY ORGANIC fat CLAY with SAND ORGANIC fat CLAY with GRAVEL SANDY ORGANIC fat CLAY SANDY ORGANIC fat CLAY with GRAVEL GRAVELLY ORGANIC fat CLAY GRAVELLY ORGANIC fat CLAY with SAND
OH	ORGANIC elastic SILT ORGANIC elastic SILT with SAND ORGANIC elastic SILT with GRAVEL SANDY ORGANIC elastic SILT SANDY ORGANIC elastic SILT with GRAVEL GRAVELLY ORGANIC elastic SILT GRAVELLY ORGANIC elastic SILT with SAND
OL/OH	ORGANIC SOIL ORGANIC SOIL with SAND ORGANIC SOIL with GRAVEL SANDY ORGANIC SOIL SANDY ORGANIC SOIL with GRAVEL GRAVELLY ORGANIC SOIL GRAVELLY ORGANIC SOIL with SAND

FIELD AND LABORATORY TESTING

- (C) Consolidation (ASTM D 2435)
- (CL) Collapse Potential (ASTM D 5333)
- (CP) Compaction Curve (CTM 216)
- (CR) Corrosivity Testing (CTM 643, CTM 422, CTM 417)
- (CU) Consolidated Undrained Triaxial (ASTM D 4767)
- (DS) Direct Shear (ASTM D 3080)
- (EI) Expansion Index (ASTM D 4829)
- (M) Moisture Content (ASTM D 2216)
- (OC) Organic Content-% (ASTM D 2974)
- (P) Permeability (CTM 220)
- (PA) Particle Size Analysis (ASTM D 422)
- (PI) Plasticity Index (AASHTO T 90) Liquid Limit (AASHTO T 89)
- (PL) Point Load Index (ASTM D 5731)
- (PM) Pressure Meter
- (R) R-Value (CTM 301)
- (SE) Sand Equivalent (CTM 217)
- (SG) Specific Gravity (AASHTO T 100)
- (SL) Shrinkage Limit (ASTM D 427)
- (SW) Swell Potential (ASTM D 4546)
- (UU) Unconsolidated Undrained Triaxial (ASTM D 2850)
- (UW) Unit Weight (ASTM D 4767)

REGISTERED PROFESSIONAL ENGINEER V.R.NADESHWARAN No. GE 2390 Exp. 9/30/11 GEOTECHNICAL STATE OF CALIFORNIA

APPARENT DENSITY OF COHESIONLESS SOILS

Description	SPT N_{60} (Blows / 12 in.)
Very Loose	0 – 5
Loose	5 – 10
Medium Dense	10 – 30
Dense	30 – 50
Very Dense	Greater than 50

MOISTURE

Description	Criteria
Dry	No discernable moisture
Moist	Moisture present, but no free water
Wet	Visible free water

PERCENT OR PROPORTION OF SOILS

Description	Criteria
Trace	Particles are present but estimated to be less than 5%
Few	5% – 10%
Little	15% – 25%
Some	30% – 45%
Mostly	50% – 100%

PARTICLE SIZE

Description		Size (in.)
Boulder		Greater than 12
Cobble		3 – 12
Gravel	Coarse	3/4 – 3
	Fine	1/5 – 3/4
Sand	Coarse	1/16 – 1/5
	Medium	1/64 – 1/16
	Fine	1/300 – 1/64
Silt and Clay		Less than 1/300

AS-BUILT
V.R. Nadeshwaran 08/10/14
NO AS-BUILT CHANGES

BENCHMARK
S.P.S.N. 00586
6'x 6' CONC POST WITH DRIVE PIN LOCATED 1 MILE S.E. ALONG S.F.RR FROM RR CROSSING AT BOULDER AVE., AT SOUTH END OF ST. HWY R/W FENCE, 23.5 FT. NORTH OF NORTH RAIL OF RR, 41 FT. EAST OF BOULDER AVE., NORTHBOUND TRAFFIC LANE, 12 FT. NORTH OF CULVERT HEADWALL.
ELEV. = 1353.459'

REGISTERED PROFESSIONAL ENGINEER V.R.NADESHWARAN No. GE 2390 Exp. 9/30/11 GEOTECHNICAL STATE OF CALIFORNIA

SUBMITTED BY: V.R. Nadeshwaran DATE: 10-04-11

PLANS PREPARED BY:
DIAZ, YOURMAN & ASSOCIATES
1616 EAST 17TH STREET
SANTA ANA, CA 92705

REVISIONS

MARK	DESCRIPTION	APPR.	DATE
1	AS BUILT PLANS	VRN	6/10/14

CITY OF HIGHLAND
DESIGNED BY AA | DRAWN BY AA | CHECKED BY VN
SUBMITTED BY
RECOMMENDED BY V.R.NADESHWARAN 10/4/11
V.R. NADESHWARAN R.C.E. 2390 EXP. 9-30-11 DATE
APPROVED BY Steve Wong 10.6.11
ERNEST WONG, CITY ENGINEER R.C.E. 37413 EXP. 6-30-12 DATE

BOULDER AVENUE BRIDGE OVER CITY CREEK (REPLACEMENT)

TERMS AND SYMBOLS FOR BORING LOGS (2 of 2)

DRAWER NO.
SHEET 35 OF 36

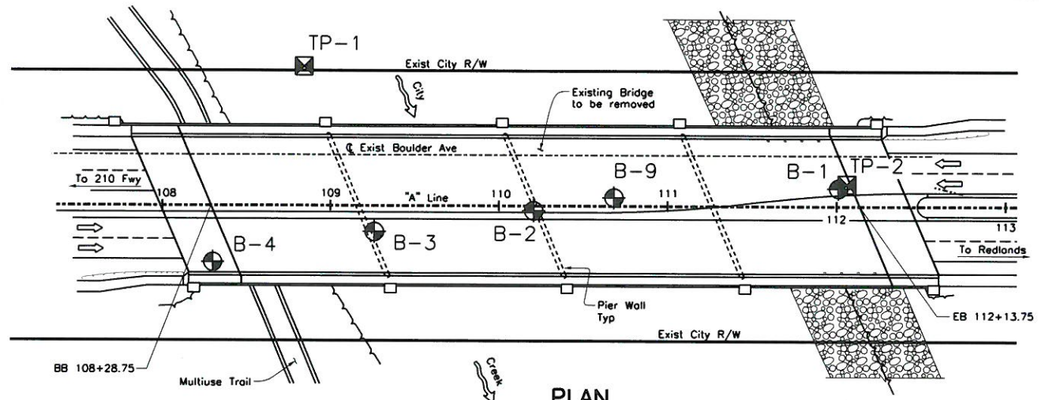

PLAN
1" = 40'

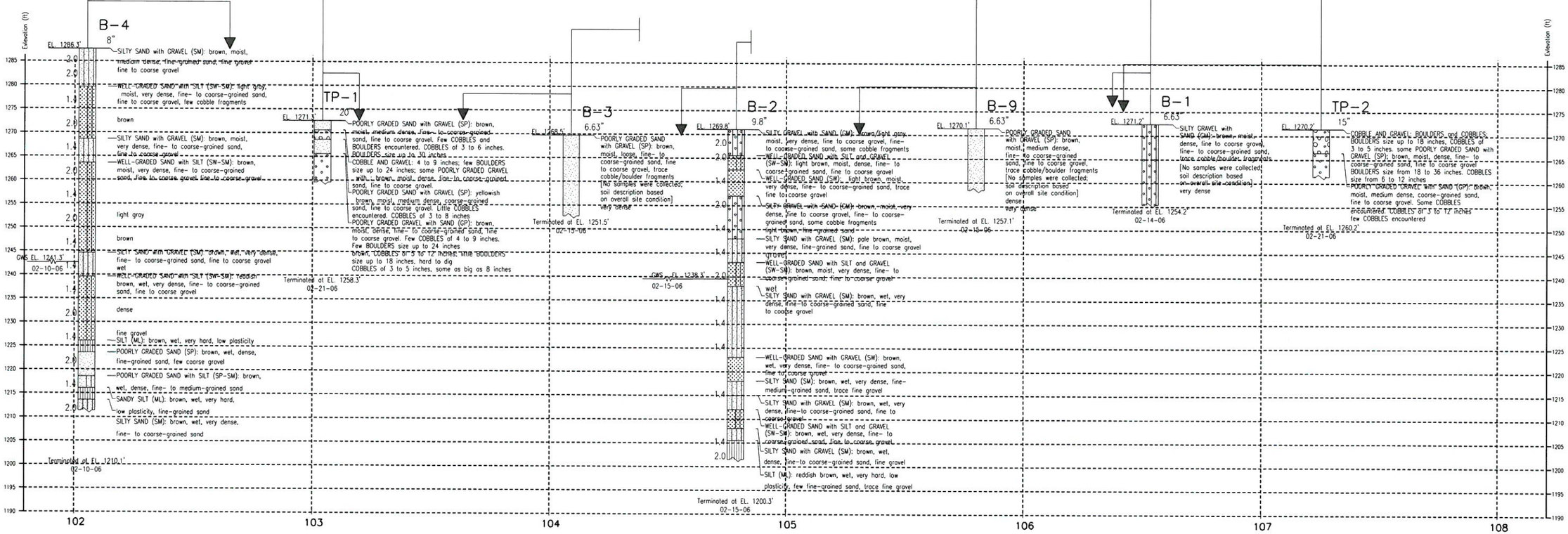

PROFILE
HORIZ: 1" = 20'
VERT: 1" = 10'

REGISTERED PROFESSIONAL ENGINEER V.R. NADESHWARAN No. GE 2390 Exp. 9/30/11 GEOTECHNICAL STATE OF CALIFORNIA

AS-BUILT
V.R. Nadeshwaran 08/10/14
NO AS-BUILT CHANGES

BENCHMARK
S.P.S.N. 00586
6'x 6' CONC POST WITH DRIVE PIN LOCATED 1 MILE S.E. ALONG S.F.RR FROM RR CROSSING AT BOULDER AVE., AT SOUTH END OF ST. HWY R/W FENCE, 23.5 FT. NORTH OF NORTH RAIL OF RR, 41 FT. EAST OF BOULDER AVE., NORTHBOUND TRAFFIC LANE, 12 FT. NORTH OF CULVERT HEADWALL.
ELEV. = 1353.459'

REGISTERED PROFESSIONAL ENGINEER V.R. NADESHWARAN No. GE 2390 Exp. 9/30/11 GEOTECHNICAL STATE OF CALIFORNIA

SUBMITTED BY: V.R. Nadeshwaran
DATE: 10-04-11

PLANS PREPARED BY:
DIAZ, YOURMAN & ASSOCIATES
1616 EAST 17TH STREET
SANTA ANA, CA 92705

REVISIONS

MARK	DESCRIPTION	APPR.	DATE
1	AS BUILT PLANS	VRN	8/10/14

CITY OF HIGHLAND

DESIGNED BY AA | DRAWN BY AA | CHECKED BY VN
SUBMITTED BY
RECOMMENDED BY V.R.NADESHWARAN 10/4/11
V.R. NADESHWARAN R.G.E. 2390 EXP. 9-30-11 DATE
APPROVED BY Ernest Wong 10.6.11
ERNEST WONG, CITY ENGINEER R.C.E. 37413 EXP. 6-30-12 DATE

BOULDER AVENUE BRIDGE OVER CITY CREEK (REPLACEMENT)

LOG OF TEST BORINGS

DRAWER NO.
SHEET 36 OF 36